CROSS SECTION

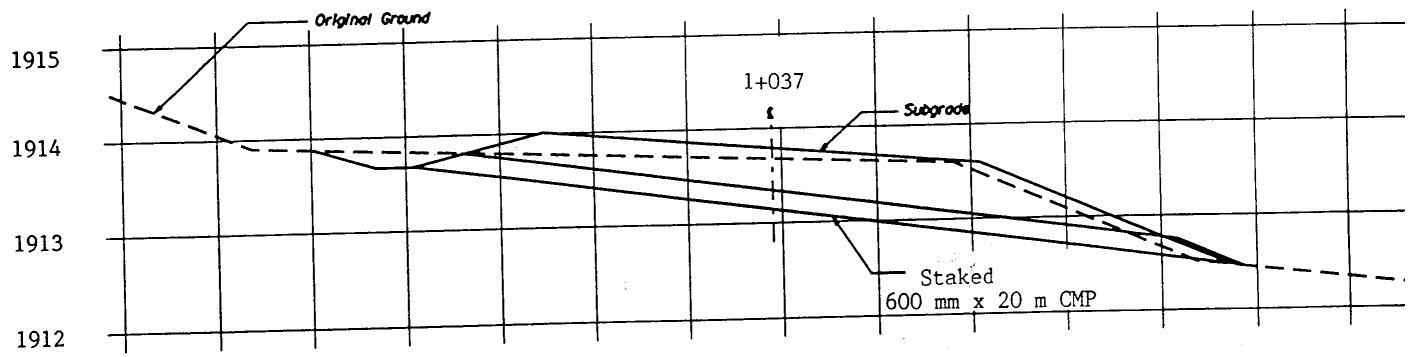

CASCADE LAKES HIGHWAY
OR PFH 46-1(3)
DTFH70-94-C-00011