STATE	PROJECT	SHEET NUMBER

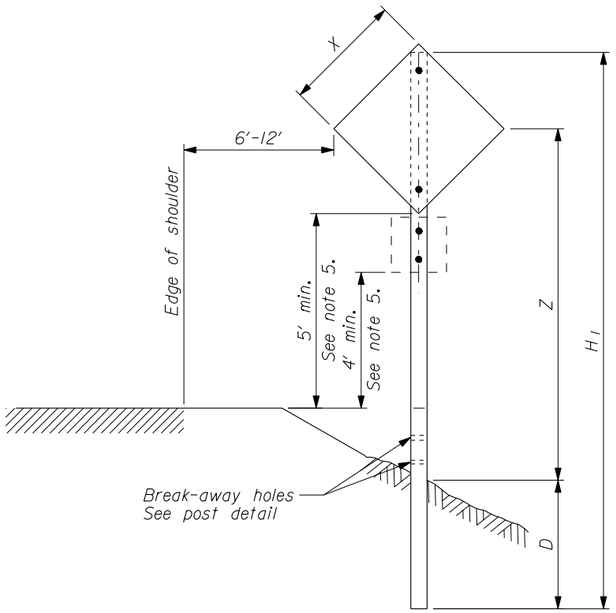

SINGLE POST SIGN

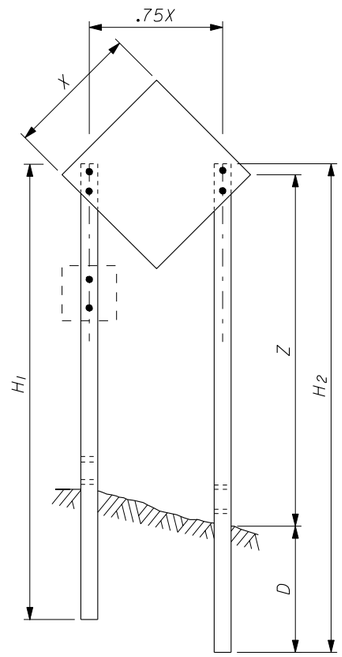

TWO POST SIGN

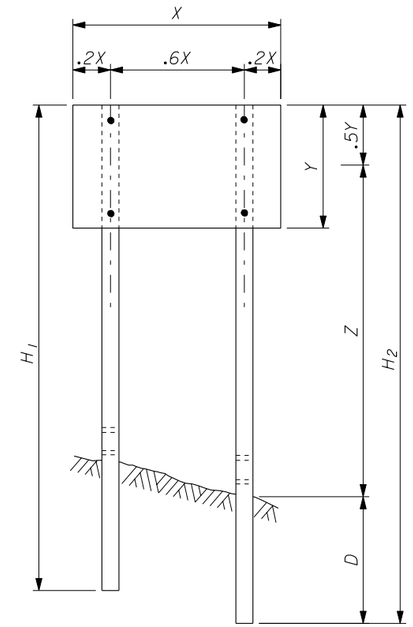

NOTE:

1. Attach sign panels with a minimum of 2 - 1/4" diameter bolts per post.
2. Mount signs smaller than listed on a single 4" x 4" post. For signs not shown, use next largest size.
3. H_1 and H_2 = Overall post length. Select post lengths to fit field conditions.
4. D = Post embedment depth for average soil conditions.
5. When pedestrians are present, or in areas where the view is obstructed, use 7' minimum mounting height.

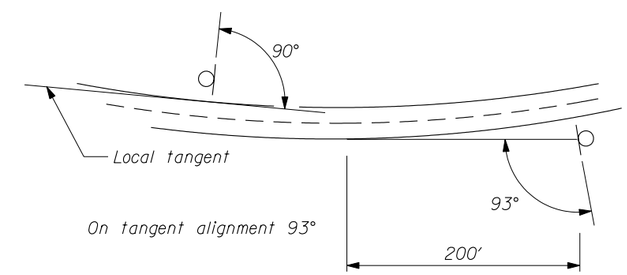

SIGN INSTALLATION ANGLE

WOOD POST SELECTION TABLE

SIGN SHAPE	X x Y	GROUNDLINE TO CENTER OF SIGN HEIGHT (Z)									
		Z IS 10' OR LESS					Z IS GREATER THAN 10'				
		NUMBER OF POSTS	POST SIZE	D	HOLE SIZE	NOTCH DEPTH	NUMBER OF POSTS	POST SIZE	D	HOLE SIZE	NOTCH DEPTH
◇ ⬡	30" x 30"	1	4" x 4"	36"	0	0	1 or 2	4" x 6" 4" x 4"	48" 36"	1 1/2" 0	0 0
◇ ⬡ ○	36" x 36"	1 or 2	4" x 6" 4" x 4"	48" 36"	1 1/2" 0	0 0	1 or 2	4" x 6" 4" x 4"	48" 36"	1 1/2" 0	0 0
◇ ⬡	48" x 48"	1	4" x 6"	48"	1 1/2"	0	1 or 2	6" x 8" 4" x 6"	48" 48"	3" 1 1/2"	0 1 3/4"
▭	60" x 30"	2	4" x 4"	36"	0	0	2	4" x 6"	48"	1 1/2"	1 3/4"
▭	78" x 42"	2	4" x 6"	48"	1 1/2"	1 3/4"	2	4" x 6"	48"	1 1/2"	1 3/4"
▭	96" x 48"	2	4" x 6"	48"	1 1/2"	1 3/4"	2	6" x 8"	48"	3"	2 1/4"

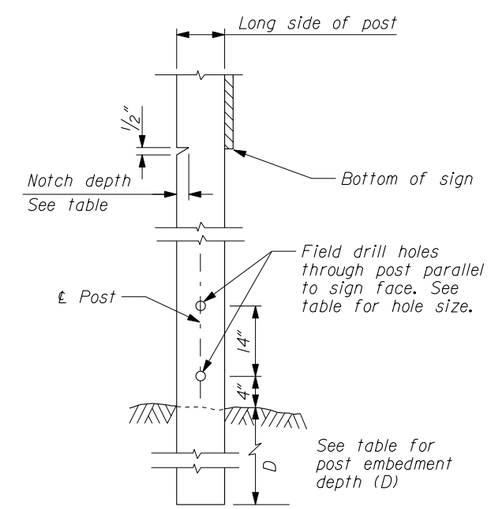

POST DETAIL

NO SCALE

U.S. DEPARTMENT OF TRANSPORTATION
FEDERAL HIGHWAY ADMINISTRATION
WESTERN FEDERAL LANDS HIGHWAY DIVISION

DETAIL

CONSTRUCTION SIGN INSTALLATION WOOD POSTS

DETAIL APPROVED FOR USE 8/2003

REVISED:

DETAIL W635-2

F:\StanDraw\Western\w63502.dgn 20-Aug-2003 10:12 AM