STATE	PROJECT	SHEET NUMBER
WY	PRA-GRTE 13(4) PRA-GRTE 13(8) PLD-GRTE 710(1)	A

U. S. DEPARTMENT OF THE INTERIOR
NATIONAL PARK SERVICE
GRAND TETON NATIONAL PARK

PLANS FOR PROPOSED PROJECT

Project Location

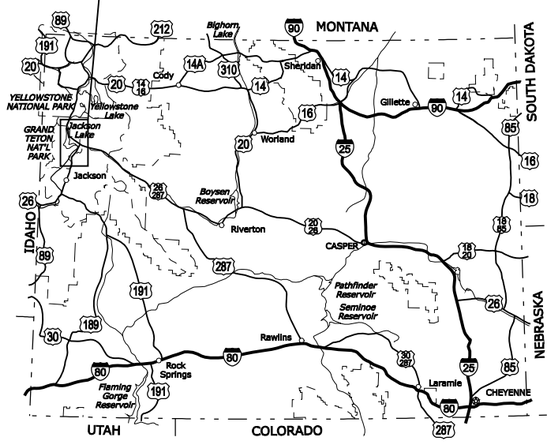

WYOMING KEY MAP

WY PRA-GRTE 13(4)
NPS PKG. NO. 54252

NORTH PARK ROAD, PHASE II

(PART ONE)

WY PRA-GRTE 13(8)
NPS PKG. NO. 90950

NORTH PARK ROAD, SNAKE RIVER BRIDGE

(PART TWO)

WY PLD-GRTE 710(1)
NPS PKG. NO. 114407

GRAND TETON PARK PATHWAYS, PHASE I

(PART THREE)

TETON COUNTY
WYOMING

TYPE OF CONSTRUCTION:

See Title Sheets 1A.1, 2A.1, & 3A.1

DESIGN DESIGNATION:

See Title Sheets 1A.1, 2A.1, & 3A.1

PROJECT WY PRA-GRTE 13(8)
NORTH PARK ROAD
SNAKE RIVER BRIDGE
(PART TWO)

PROJECT WY PLD-GRTE 710(1)
GRAND TETON PARK PATHWAYS,
PHASE I
(PART THREE)

SPECIFICATION:

Standard Specifications for Construction of Roads and Bridges on Federal Highway Projects, FP-03 Metric Units

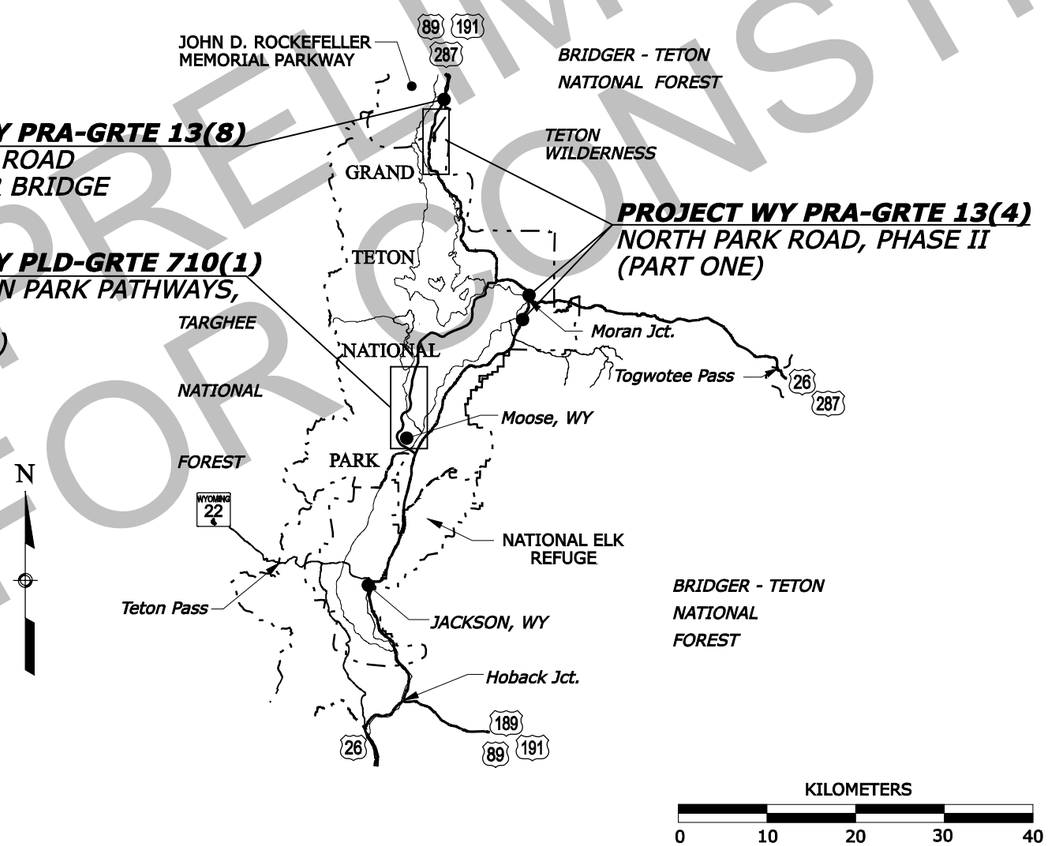

INDEX TO SHEETS

A. TITLE SHEET

1. PART ONE
1A.TO 1L. WY PRA-GRTE 13(4)
NORTH PARK ROAD, PHASE II
NORTH PARK ROAD, MORAN SHOULDER WIDENING
NORTH PARK ROAD, MORAN ENTRANCE STATION REPAIR
EASTSIDE HIGHWAY, BUFFALO FORK RIPRAP

2. PART TWO
2A. TO 2I. WY PRA-GRTE 13(8)
NORTH PARK ROAD, SNAKE RIVER BRIDGE

3. PART THREE
3A. TO 3I. WY PLD-GRTE 710(1)
GRAND TETON PARK PATHWAYS, PHASE I

FEDERAL LANDS HIGHWAY
Metric
COMMITMENT TO EXCELLENCE

PLANS PREPARED BY

U.S. DEPARTMENT OF TRANSPORTATION
FEDERAL HIGHWAY ADMINISTRATION

WESTERN FEDERAL LANDS HIGHWAY DIVISION
VANCOUVER, WASHINGTON

RECOMMENDED:

See Title Sheets 1A.1, 2A.1, & 3A.1

APPROVED:

See Title Sheets 1A.1, 2A.1, & 3A.1

NPS Drwg. No. 136/80197,80199,80200

PRELIMINARY
NOT FOR CONSTRUCTION

--/---- | Checked by: | 07/2007 | J.Aguirre | Designed by: | 26-OCT-2007 10:28AM | IP_PWP:dms01581\GRTE_Cover.dgn [Metric_2D]

STATE	PROJECT	SHEET NUMBER
WY	PRA-GRTE 13(4)	1A.1

U. S. DEPARTMENT OF THE INTERIOR
NATIONAL PARK SERVICE
GRAND TETON NATIONAL PARK

PLANS FOR PROPOSED PROJECT

WY PRA-GRTE 13(4)
NPS PKG. NO. 54252

NORTH PARK ROAD PHASE II

LENGTH 10.473 KILOMETERS

(MORAN SHOULDER WIDENING)

LENGTH 0.12 KILOMETERS

(MORAN ENTRANCE STATION REPAIR)

LENGTH 0.08 KILOMETERS

EASTSIDE HIGHWAY

(BUFFALO FORK RIPRAP)

LENGTH 0.309 KILOMETERS

(PART ONE OF THREE)

TETON COUNTY
WYOMING

Project Location

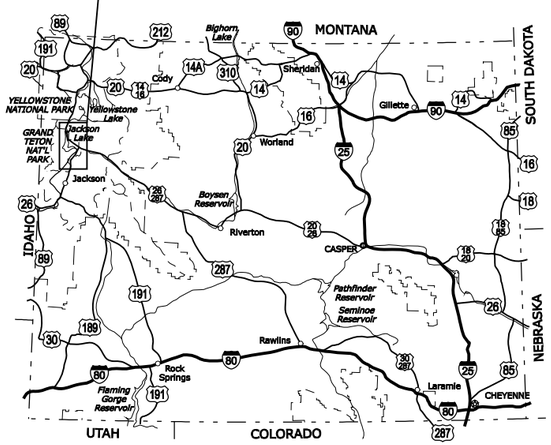

WYOMING KEY MAP

TYPE OF CONSTRUCTION:

Recycled Aggregate, Asphalt milling, Grading, Base, and Paving

DESIGN DESIGNATION:

North Park Road

ADT 2002	5000
ADT 2022	6100
V	80 km/h
e (max)	0.060

SPECIFICATION:

Standard Specifications for Construction of Roads and Bridges on Federal Highway Projects, FP-03 Metric Units

FEDERAL LANDS HIGHWAY
Metric
COMMITMENT TO EXCELLENCE

PLANS PREPARED BY

U.S. DEPARTMENT OF TRANSPORTATION
FEDERAL HIGHWAY ADMINISTRATION

WESTERN FEDERAL LANDS HIGHWAY DIVISION
VANCOUVER, WASHINGTON

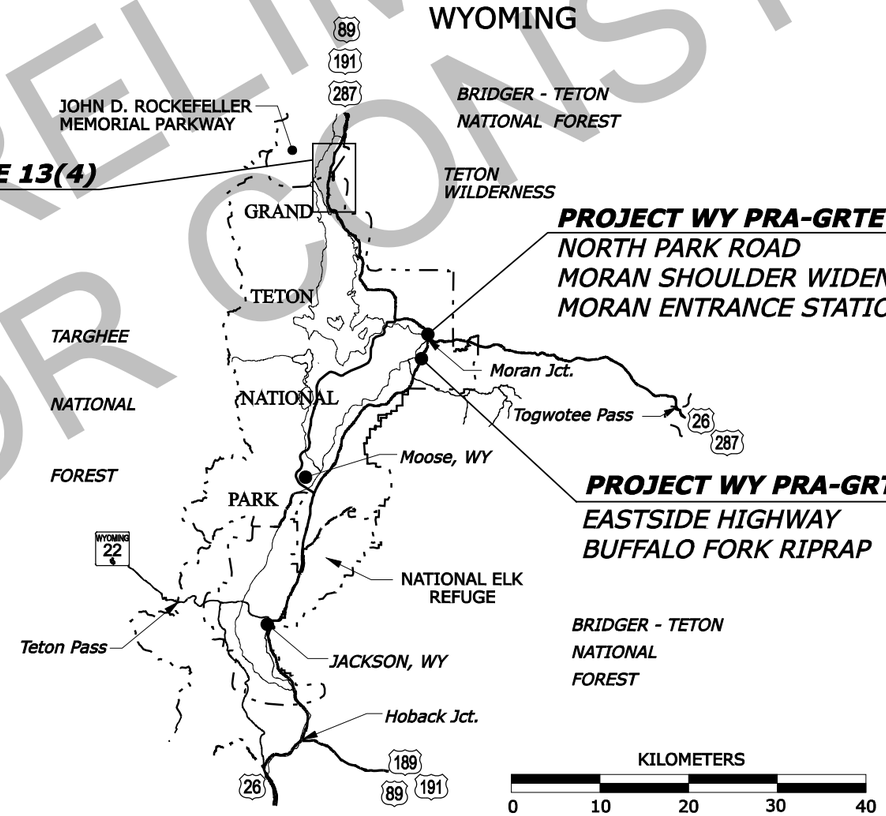

NOTE:

1. *See Sheet A.2 for Index to Sheets.*
2. *See Sheet A.4 for Vicinity Map.*

RECOMMENDED:

_____ DATE _____
Director, Project Delivery,
Western Federal Lands Highway Division

APPROVED:

_____ DATE _____
Superintendent,
Grand Teton National Park

NPS Drwg. No. 136/80197

PRELIMINARY
NOT FOR CONSTRUCTION

IP_PWP:dms01581\grte1304aa_V8.dgn [Metric_2D] | Designed by: Juan Aguirre | Checked by: | 26-OCT-2007 10:28AM | --/---- | --/----

STATE	PROJECT	SHEET NUMBER
WY	PRA-GRTE 13(4)	1A.4

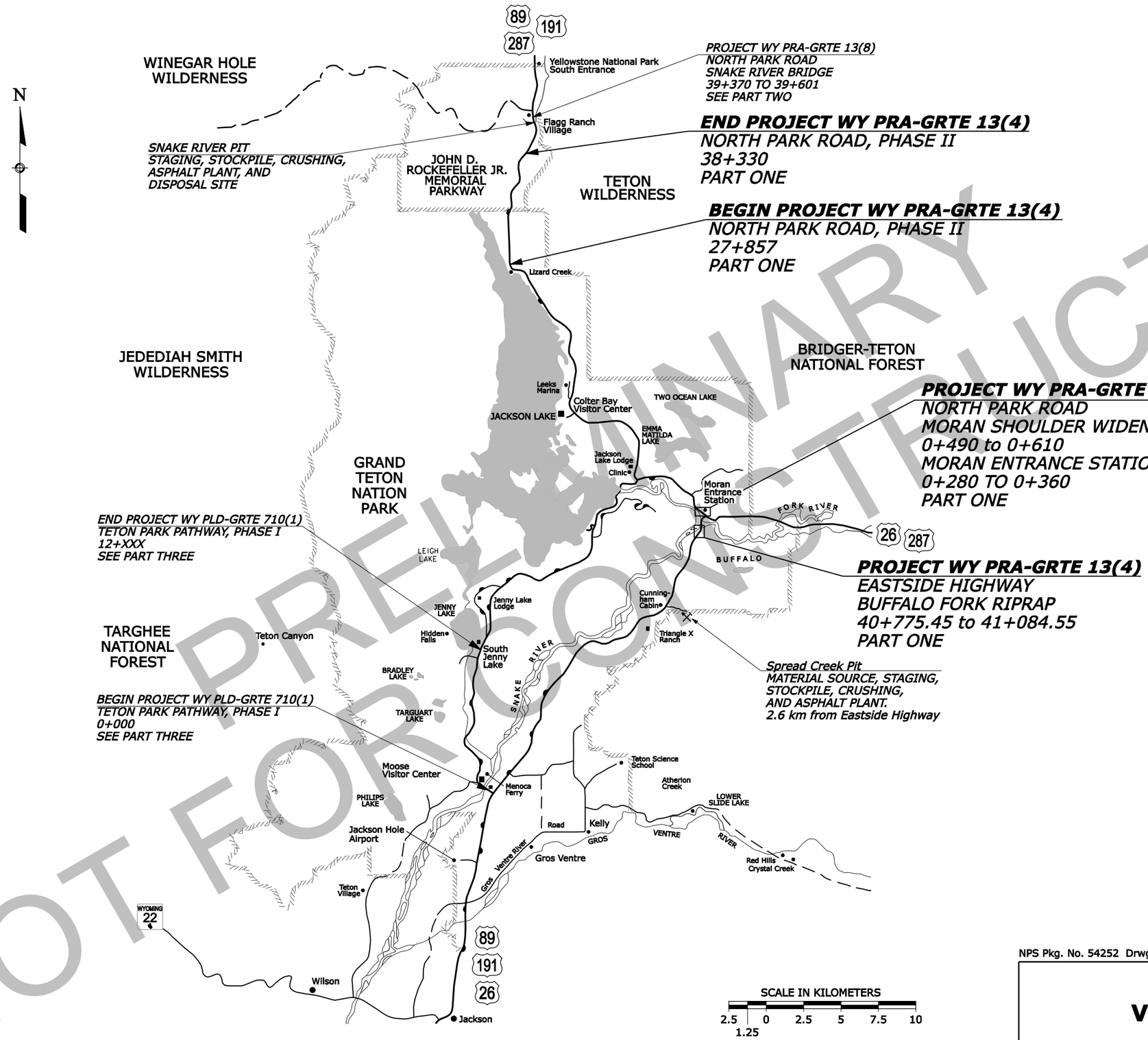

PRELIMINARY
NOT FOR CONSTRUCTION

NPS Pkg. No. 54252 Drwg. No. 136/80197

VICINITY MAP

C:\Wyfiles\PW_Production\LLTuttle\dms01581\grte1304ad_V8.dgn
DATE " + " _FILE_ Designed by: Juan Aguirre Checked by:

STATE	PROJECT	SHEET NUMBER
WY	PRA-GRTE 13(4)	1C.2

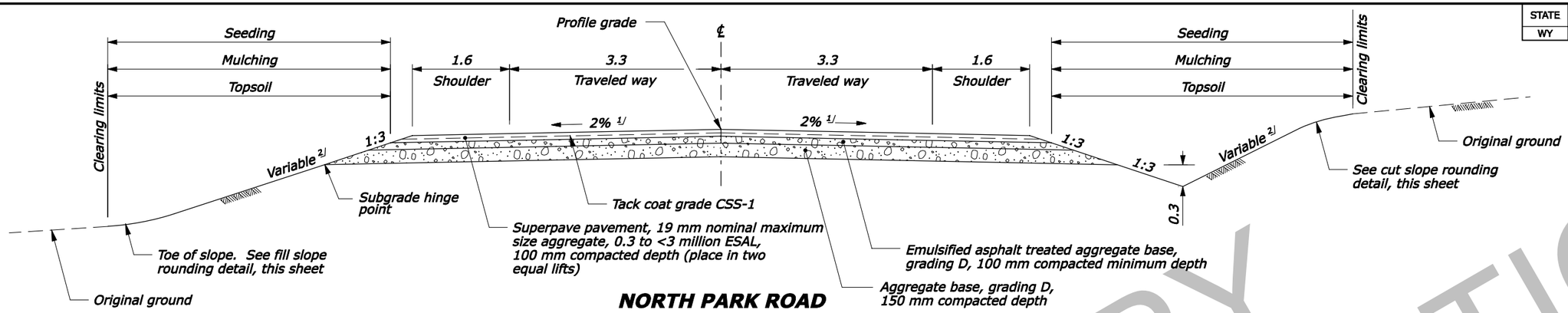

NORTH PARK ROAD
27+857 to 33+000

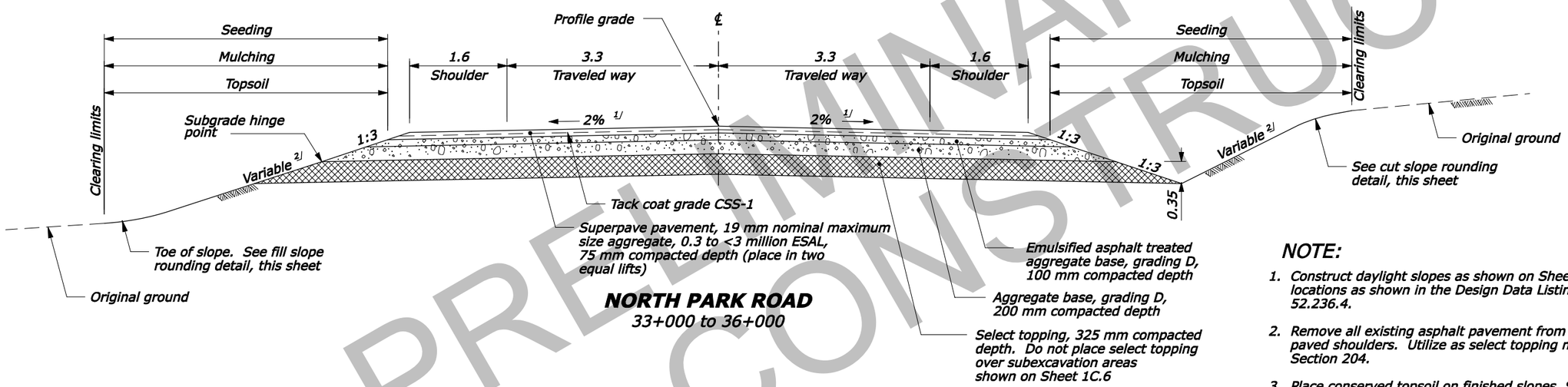

NORTH PARK ROAD
33+000 to 36+000

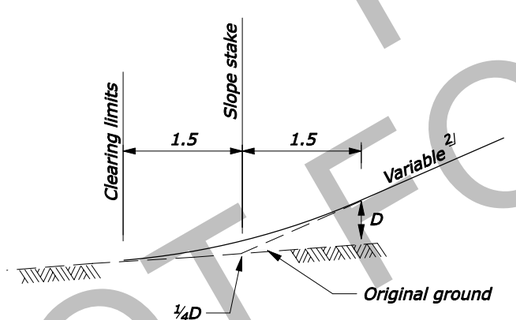

FILL SLOPE 4/
ROUNDING DETAIL

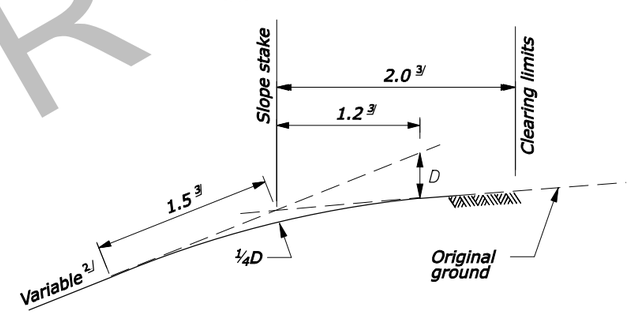

CUT SLOPE
ROUNDING DETAIL

NOTE:

1. Construct daylight slopes as shown on Sheet 1C.3, and at additional locations as shown in the Design Data Listings. See FAR Clause 52.236.4.
2. Remove all existing asphalt pavement from the entire roadway and paved shoulders. Utilize as select topping material according to Section 204.
3. Place conserved topsoil on finished slopes. See Section 624.
4. Dimensions without units are meters.

FOOTNOTE:

1/ Superelevate roadway on curves at the rate "e" as indicated in the curve data shown on the plan and profile and in the Staking Report Data Listing (see FAR Clause 52.236.4).

2/ Construct slopes as shown in the Staking Report Data Listing (see FAR Clause 52.236.4).

3/ Prorate clearing and rounding distances on cut heights less than 1.5 meters, according to the Clearing Report Data Listing.

4/ In designated wetland areas, do not round fill slope or perform clearing, topsoiling, seeding or mulching outside of the slope stakes.

NPS Pkg. No. 54252 Drwg. No. 136/80197

TYPICAL SECTIONS
NORTH PARK ROAD, PHASE II
SHEET 1 OF 2

PRELIMINARY
NOT FOR CONSTRUCTION

--/---- Designed by: Juan Aguirre 04/2002 Checked by:
26-OCT-2007 10:28AM
IP_PWP:dms01583\grte13040b_V8.dgn [Metric_2D]

STATE	PROJECT	SHEET NUMBER
WY	PRA-GRTE 13(4)	1C.3

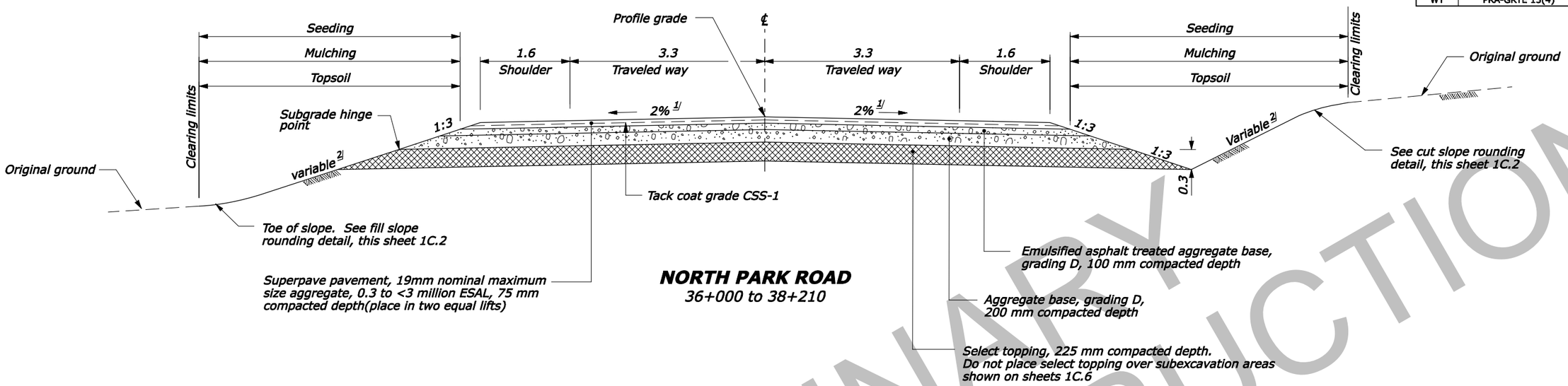

NORTH PARK ROAD
36+000 to 38+210

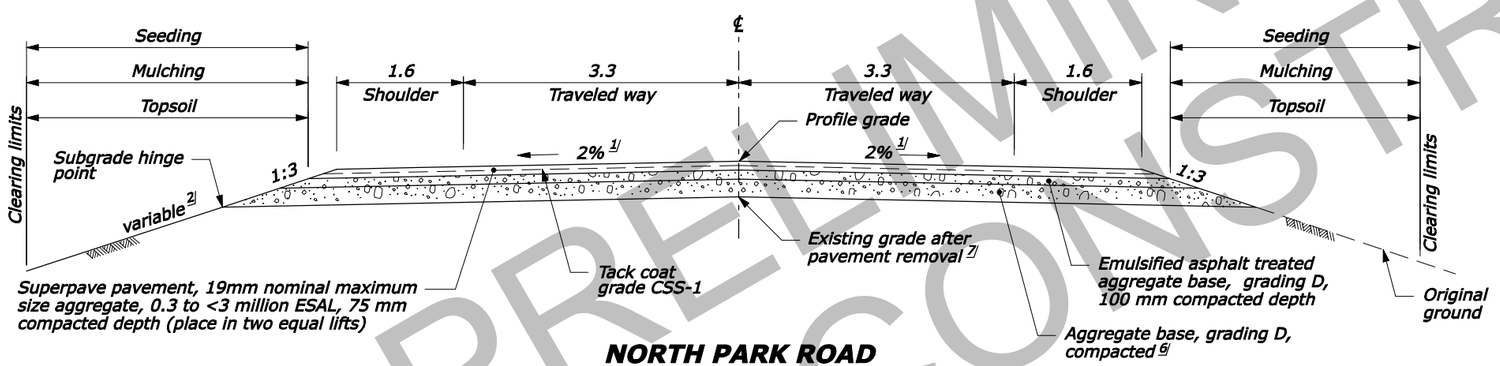

NORTH PARK ROAD
38+210 to 38+330

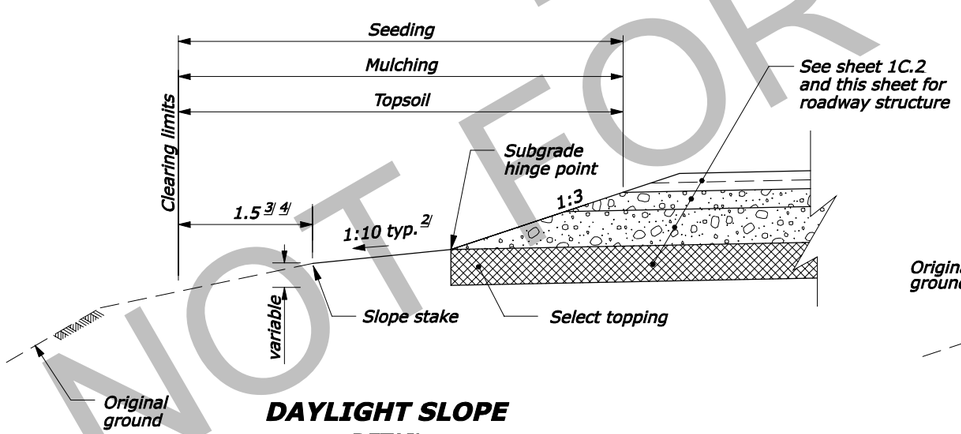

DAYLIGHT SLOPE
DETAIL

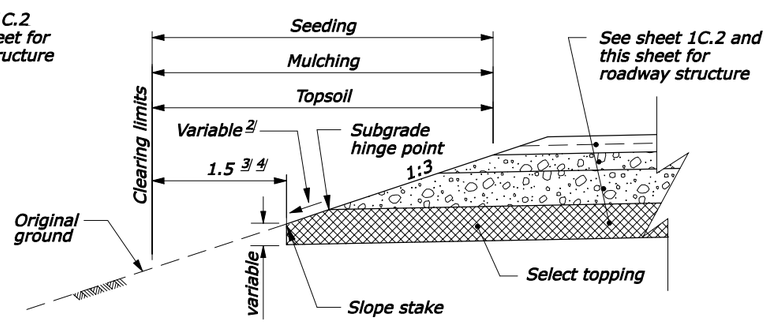

SELECT TOPPING INTERCEPT 5/
DETAIL

NOTE:

1. Construct daylight slopes as shown on this sheet, typical sections, and at additional locations as shown in the Design Data Listings. See FAR Clause 52.236.4.
2. Remove all existing asphalt pavement from the entire roadway and paved shoulders. Utilize as select topping material according to section 204.
3. Place conserved topsoil on finished slopes. See Section 624.
4. Dimensions without units are meters.

FOOTNOTE:

1/ Superelevate roadway on curves at the rate "e" as indicated in the curve data shown on the plan and profile and in the Staking Report Data Listing (see FAR Clause 52.236.4).

2/ Construct slopes as shown in the Staking Report Data Listing (see FAR Clause 52.236.4).

3/ Prorate clearing and rounding distances on cut heights less than 1.5 meters, according to the Clearing Report Data Listing.

4/ In designated wetland areas, do not round fill slope or perform clearing, topsoiling, seeding or mulching outside of the slope stakes.

5/ Use when the fill slope catch point falls within the select topping layer.

6/ Compacted depth varies.

7/ Scarify 100 mm minimum prior to placing of aggregate base.

NPS Pkg. No. 54252 Drwg. No. 136/80197

TYPICAL SECTIONS
NORTH PARK ROAD, PHASE II
SHEET 2 OF 2

PRELIMINARY
NOT FOR CONSTRUCTION

IP_PWP:dms01583\grte1304cb_V8.dgn [Metric_2D] 26-OCT-2007 10:29AM Juan Aguirre --/---- Checked by: --/---- Designed by: --/----

STATE	PROJECT	SHEET NUMBER
WY	PRA-GRTE 13(4)	1C.4

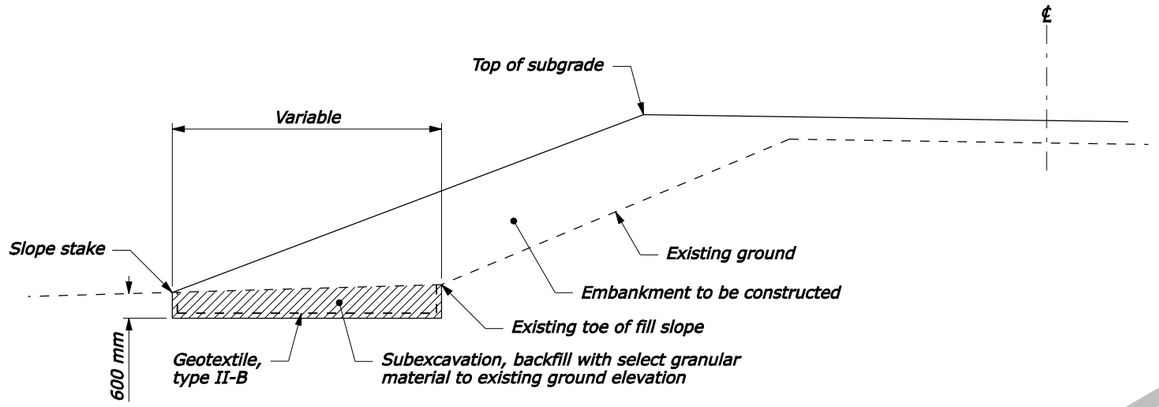

SUBEXCAVATION TYPE I

SUBEXCAVATION TYPE I (EMBANKMENT WIDENING)	
STATION	SIDE
33+900 to 33+930	RT
34+135 to 34+155	RT
35+610 to 35+630	RT
37+315 to 37+325	RT

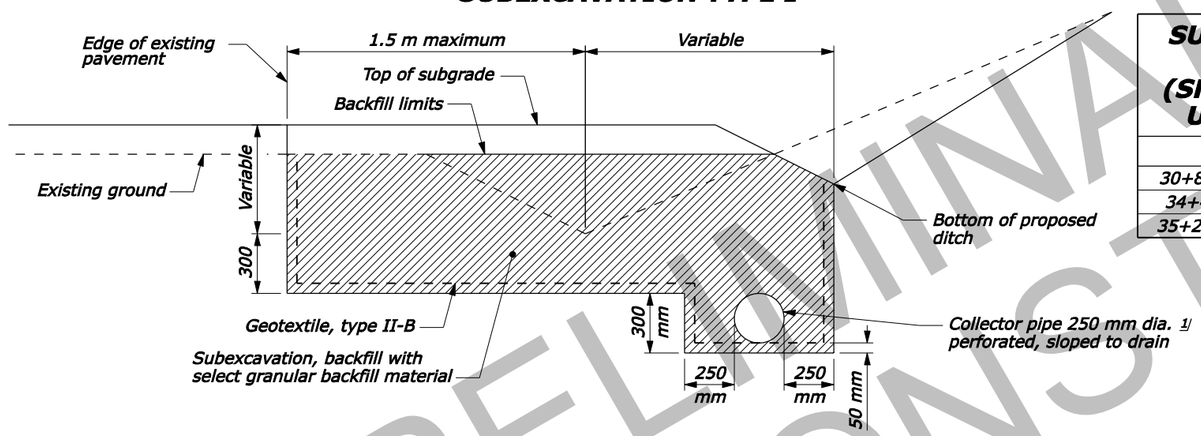

SUBEXCAVATION TYPE II (SHOULDER WITH UNDERDRAIN)	
STATION	SIDE
30+860 1/ to 31+235	RT
34+400 to 34+445 1/	RT
35+230 to 35+278.6	RT

SUBEXCAVATION TYPE II

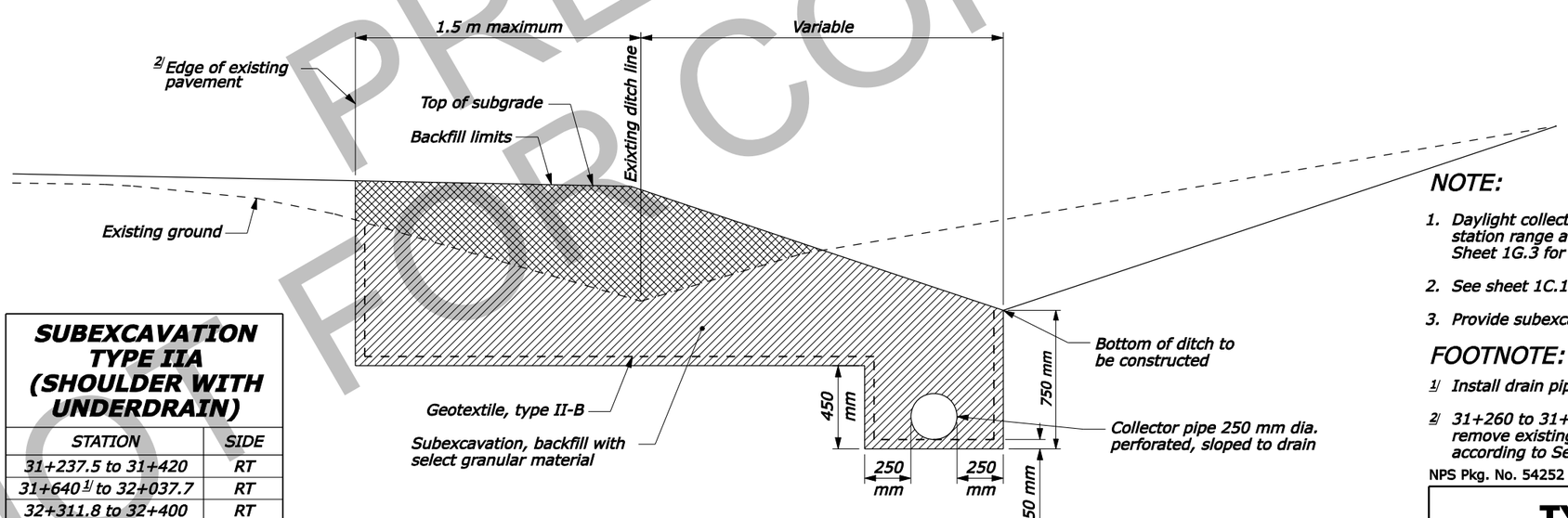

SUBEXCAVATION TYPE IIA (SHOULDER WITH UNDERDRAIN)	
STATION	SIDE
31+237.5 to 31+420	RT
31+640 1/ to 32+037.7	RT
32+311.8 to 32+400	RT
35+705 to 35+803.1	RT

SUBEXCAVATION TYPE IIA

NO SCALE

NOTE:

1. Daylight collector pipe using drain pipes at pipe culverts within station range at subexcavation Type II and IIA. See Detail A Sheet 1G.3 for details.
2. See sheet 1C.1 fro subexcavation quantities.
3. Provide subexcavation locations for approval by CO.

FOOTNOTE:

1/ Install drain pipe to daylight to left of centerline.

2/ 31+260 to 31+336 maintain 1.5 m maximum. Saw cut and remove existing pavement. Utilize as select topping material according to Section 204.

NPS Pkg. No. 54252 Drwg. No. 136/80197

TYPICAL SECTIONS SUBEXCAVATION DETAILS NORTH PARK ROAD

PRELIMINARY NOT FOR CONSTRUCTION

C:\Myfiles\PW_Production\LLtuttle\dms01583\grte1304cd_V8.dgn _DATE_ " + " _FILE_ Designed by: Juan Aguirre --/---- Checked by: --/----

STATE	PROJECT	SHEET NUMBER
WY	PRA-GRTE 13(4)	1C.6

FULL WIDTH SUBEXCAVATION, TYPE IV (BELOW SUBGRADE)

STATION	D (mm)
32+450 to 33+011.3	300
34+185 to 34+244.5	600
34+560 to 34+820 3/	1000
34+820 to 35+010 3/	600
35+180 to 35+230 3/	600

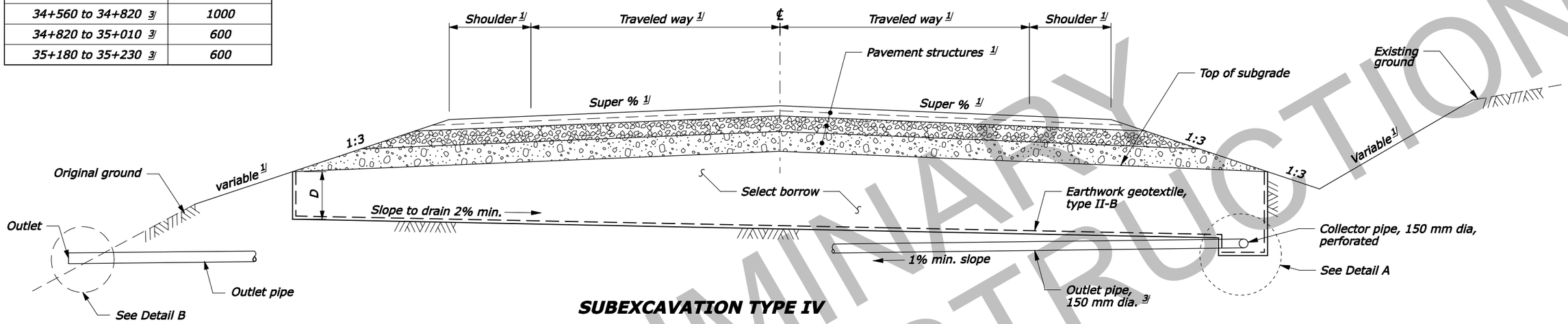

SUBEXCAVATION TYPE IV

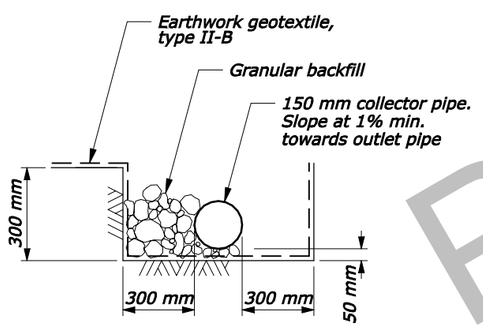

DETAIL A

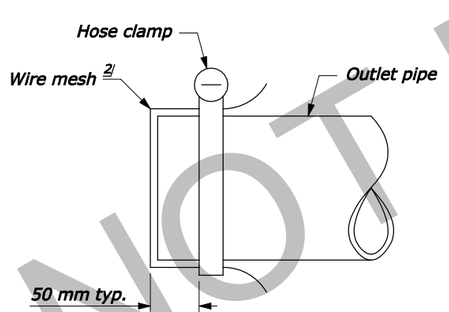

DETAIL B

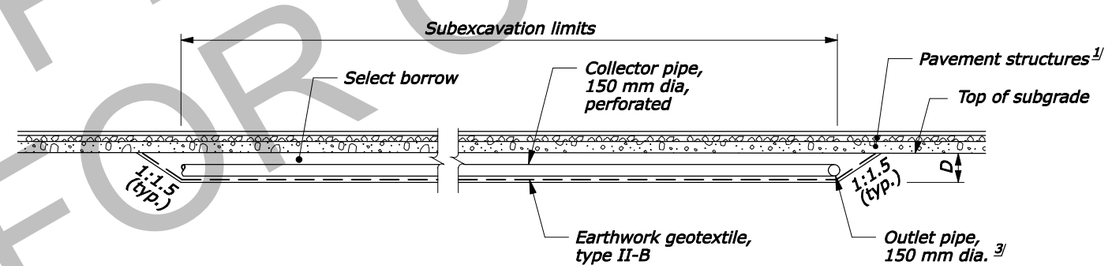

PROFILE VIEW

NOTE:

1. See Sheet 1C.1 for subexcavation quantities.
2. See Sheets IG.1-2 for collector pipe and outlet pipe quantities.
3. Following backfilling of type IV subexcvation areas, place minor asphalt, 50 mm depth, according to Subsection 404 to serve as a temporary driving surface. Place tack coat grade CSS-1 on each lift prior to placing next lift. Remove minor asphalt pavement prior to roadway excavation. Utilize as select topping material according to Section 204.
4. Do not place select topping in type IV subexcavation locations.

FOOTNOTE:

1/ See Sheets 1C.2 & 1C.3 for pavement structures and roadway dimensions.

2/ Use stainless steel WWF 6.4 mm x 6.4 mm x 1.04 mm.

3/ Outlet pipe required. All other locations daylight collector pipe at pipe culverts. See Detail "A" Sheet 1G.3.

NPS Pkg. No. 54252 Drwg. No. 136/80197

TYPICAL SECTION SUBEXCAVATION TYPE IV DETAILS NORTH PARK ROAD

PRELIMINARY NOT FOR CONSTRUCTION

--/---- Checked by: 04/2002 Juan Aguirre Designed by: 26-OCT-2007 10:29AM IP_PWP:dms01583\grte1304cg_V8.dgn [Metric_2D]

STATE	PROJECT	SHEET NUMBER
WY	PRA-GRTE 13(4)	1C.7

CONTROL POINTS

NAME	NORTHING	EASTING	Description
01	353126.543	118001.593	Top back of curb apex
02	353085.448	118032.584	Top back of curb apex

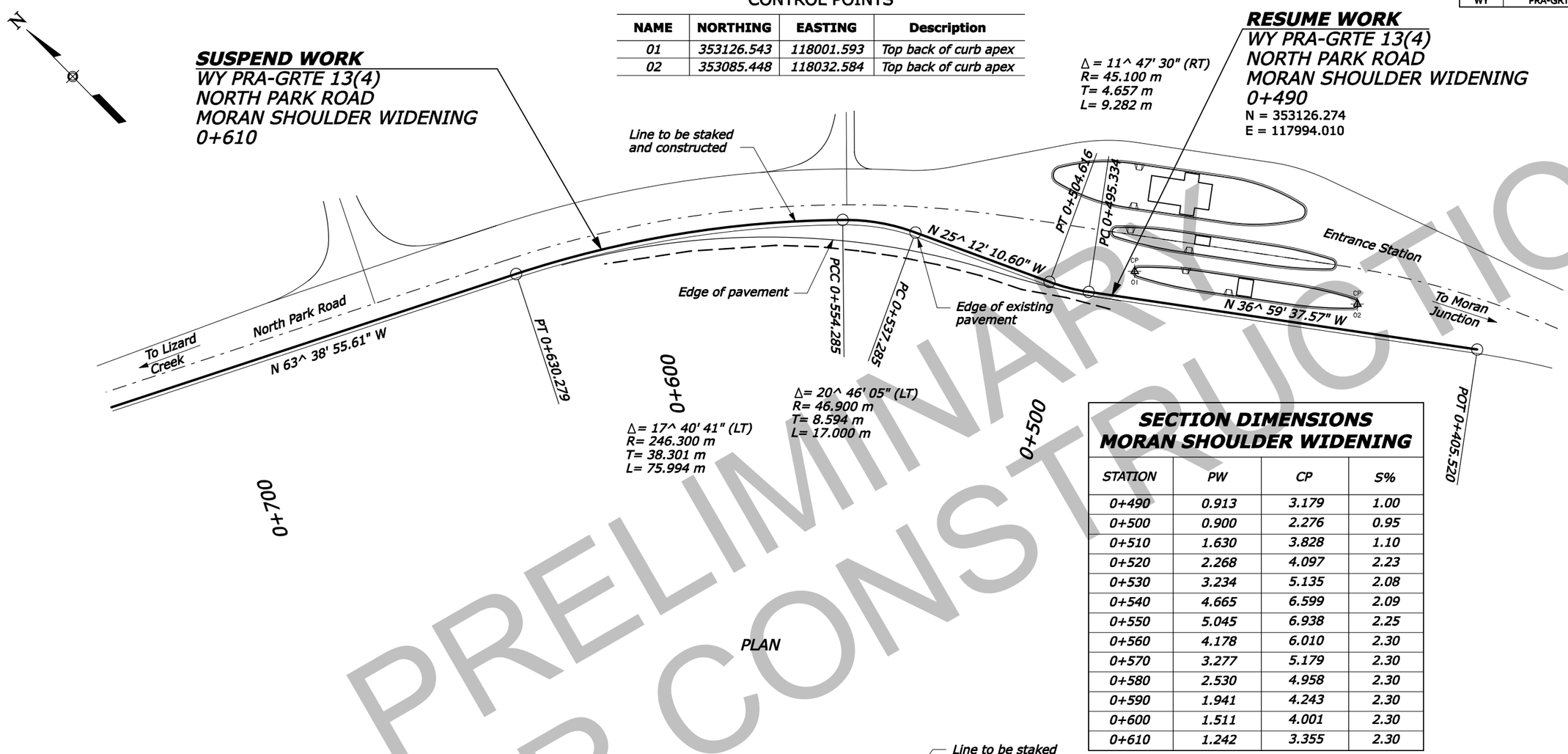

SECTION DIMENSIONS MORAN SHOULDER WIDENING

STATION	PW	CP	S%
0+490	0.913	3.179	1.00
0+500	0.900	2.276	0.95
0+510	1.630	3.828	1.10
0+520	2.268	4.097	2.23
0+530	3.234	5.135	2.08
0+540	4.665	6.599	2.09
0+550	5.045	6.938	2.25
0+560	4.178	6.010	2.30
0+570	3.277	5.179	2.30
0+580	2.530	4.958	2.30
0+590	1.941	4.243	2.30
0+600	1.511	4.001	2.30
0+610	1.242	3.355	2.30

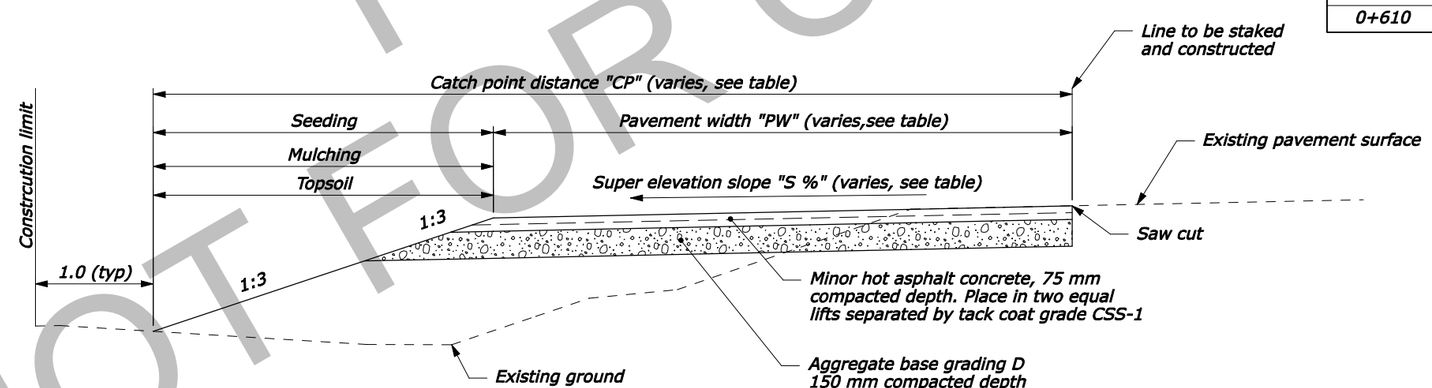

NORTH PARK ROAD
0+490 to 0+610

NO SCALE

NOTE:

1. Provide staking for approval by the CO prior to pavement removal operations.
2. Remove and conserve topsoil prior to removal of asphalt pavement. Place conserved topsoil on finished slopes. See Section 624.
3. Remove existing asphalt pavement left of centerline. Utilize as select topping according to Section 204.
4. Dimensions without units are meters.

NPS Pkg. No. 54252 Drwg. No. 136/80197

TYPICAL SECTION NORTH PARK ROAD MORAN SHOULDER WIDENING

PRELIMINARY NOT FOR CONSTRUCTION

IP_PWP:dms01585\grte13104ch_V6.dgn [Metric_2D] 26-OCT-2007 10:29AM Designed by: --/---- Checked by: --/----

STATE	PROJECT	SHEET NUMBER
WY	GRTE-PRA 13(4)	1C.8

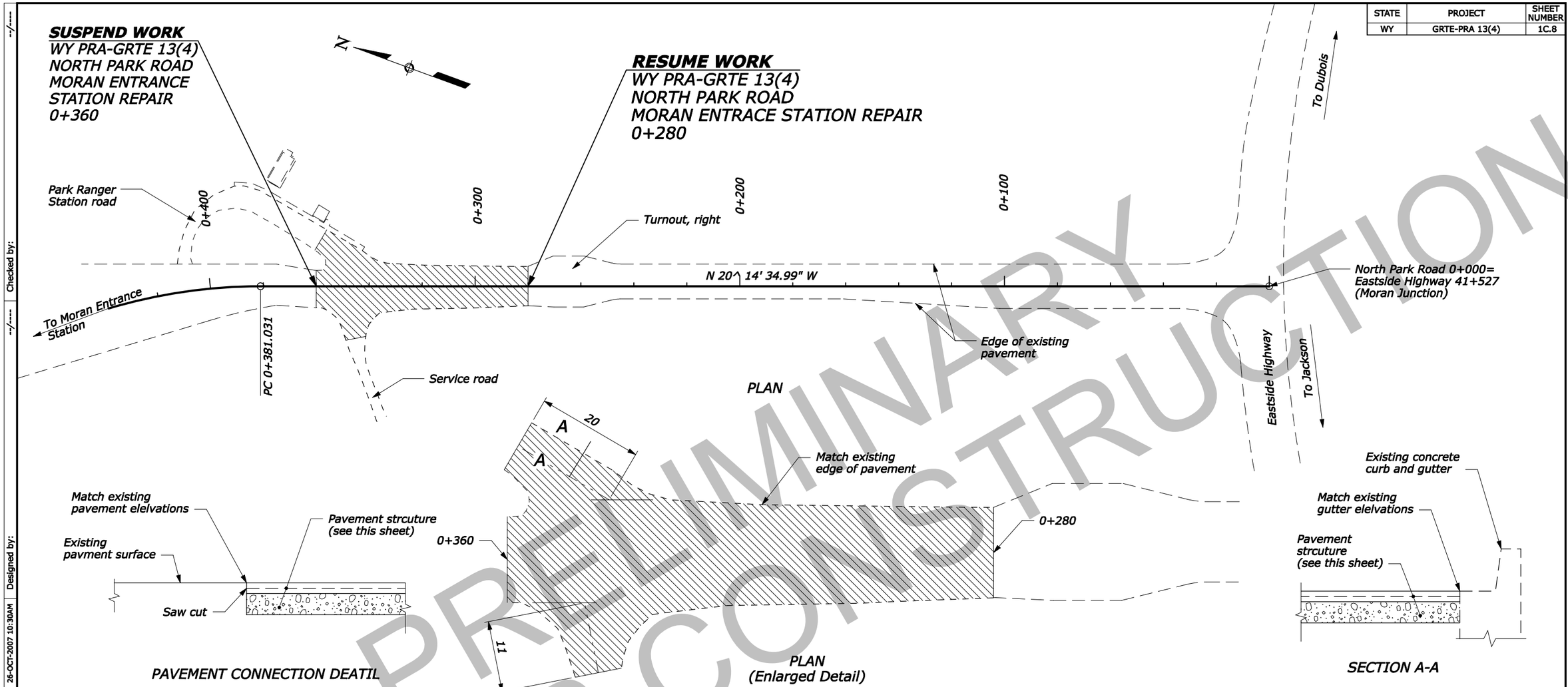

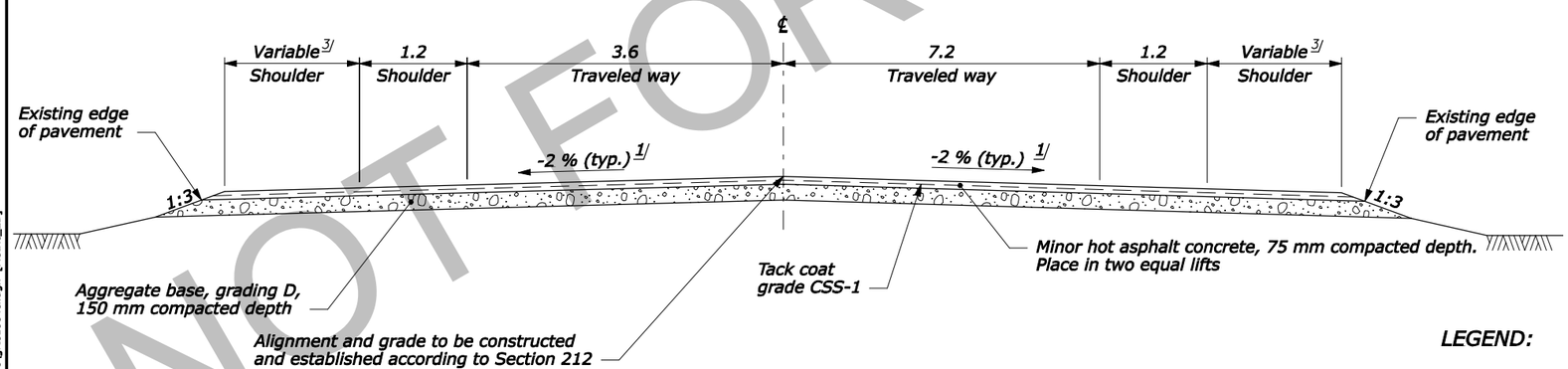

NORTH PARK ROAD
0+245 to 0+375

NOTE:

1. Provide staking for approval by the CO prior to pavement removal operations.
2. Remove existing asphalt pavement within limits of construction. Utilize as select topping according to Section 204.
3. Provide pavement connection at 0+280, 0+360, Service road, and Park Ranger Station road.
4. Dimentions without units are meters.

FOOTNOTE:

1/ Match existing slope at pavement connections.

LEGEND:

Limits of construction

NPS Pkg. No. 54252 Drwg. No. 136/80197

TYPICAL SECTION NORTH PARK ROAD MORAN ENTRANCE STATION REPAIR

PRELIMINARY NOT FOR CONSTRUCTION

IP_PWP:dms01583\grte1304cl.dgn [Metric_2D] 26-OCT-2007 10:30AM Designed by: --/---- Checked by: --/----

STATE	PROJECT	SHEET NUMBER
WY	PRA-GRTE 13(4)	1C.9

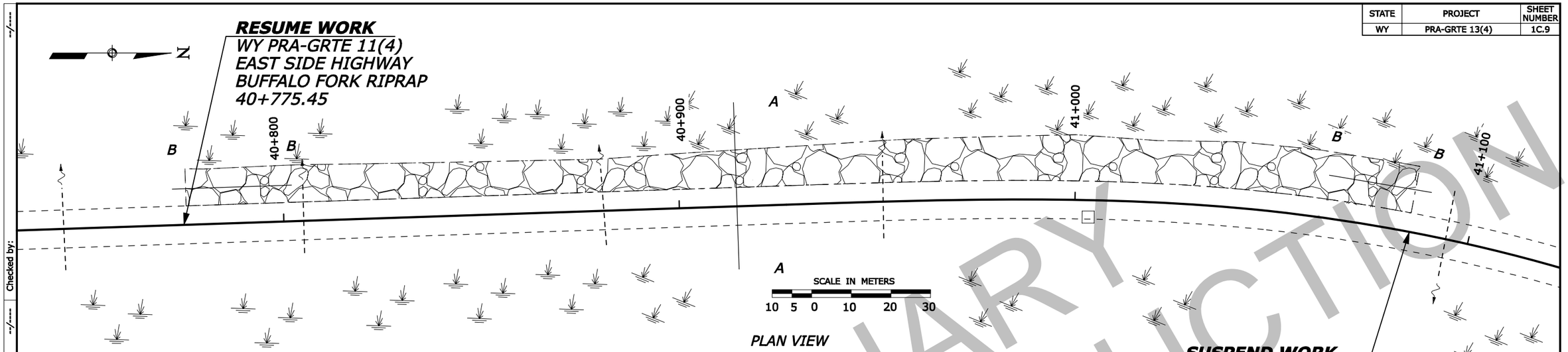

RIPRAP SLOPE WIDTHS & BENCH ELEVATIONS

STATION	SLOPE WIDTH (m)	BENCH ELEV. (m)
40+775.45	6.095	2046.074 1/
40+780	6.095	2047.374
40+800	6.350	2047.305
40+820	6.049	2047.314
40+840	5.716	2047.328
40+860	5.490	2047.355
40+880	5.232	2047.388
40+900	5.960	2047.333
40+920	6.557	2047.289
40+940	7.115	2047.265
40+960	7.788	2047.216
40+980	8.080	2047.238
41+000	8.618	2047.246
41+020	7.764	2047.428
41+040	8.833	2047.809
41+060	9.053	2047.833
41+080	8.907	2047.931
41+084.55	8.907	2046.631 2/

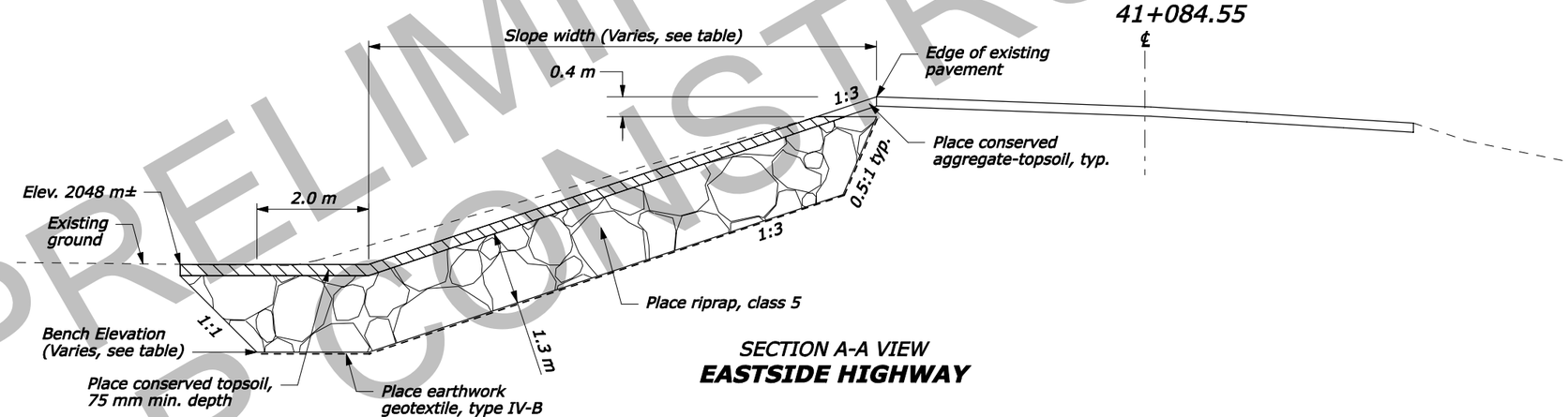

SECTION A-A VIEW
EASTSIDE HIGHWAY

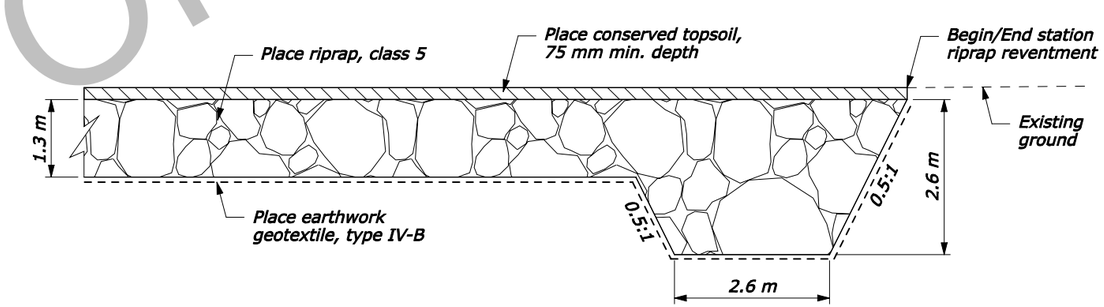

SECTION B-B VIEW
END DETAIL

QUANTITIES (INFORMATION ONLY)

DESCRIPTION	EASTSIDE HIGHWAY BUFFALO FORK RIPRAP
Geotextile type IV-B	4000 m2
Excavation	4500 m3
Chocker aggregate	200 m3

NOTE:

1. Protect existing pipe culverts.
2. Place 50 millimeters of chocker aggregate (min depth) on riprap surface prior to place conserved topsoil.

FOOTNOTE:

1/ Bench elevation at 40+776.75 to 40+779.35.

2/ Bench elevation at 41+080.65 to 41+083.25.

NPS Pkg. No. 54252 Drwg. No. 136/80197

TYPICAL SECTION EASTSIDE HIGHWAY BUFFALO FORK RIPRAP

PRELIMINARY NOT FOR CONSTRUCTION

Checked by: --/---- --/----
Designed by: 26-OCT-2007 10:30AM
IP_PWP:dms01584\grte13044_V8.dgn [Default]

STATE	PROJECT	SHEET NUMBER
WY	PRA-GRTE 13(4)	1D.3

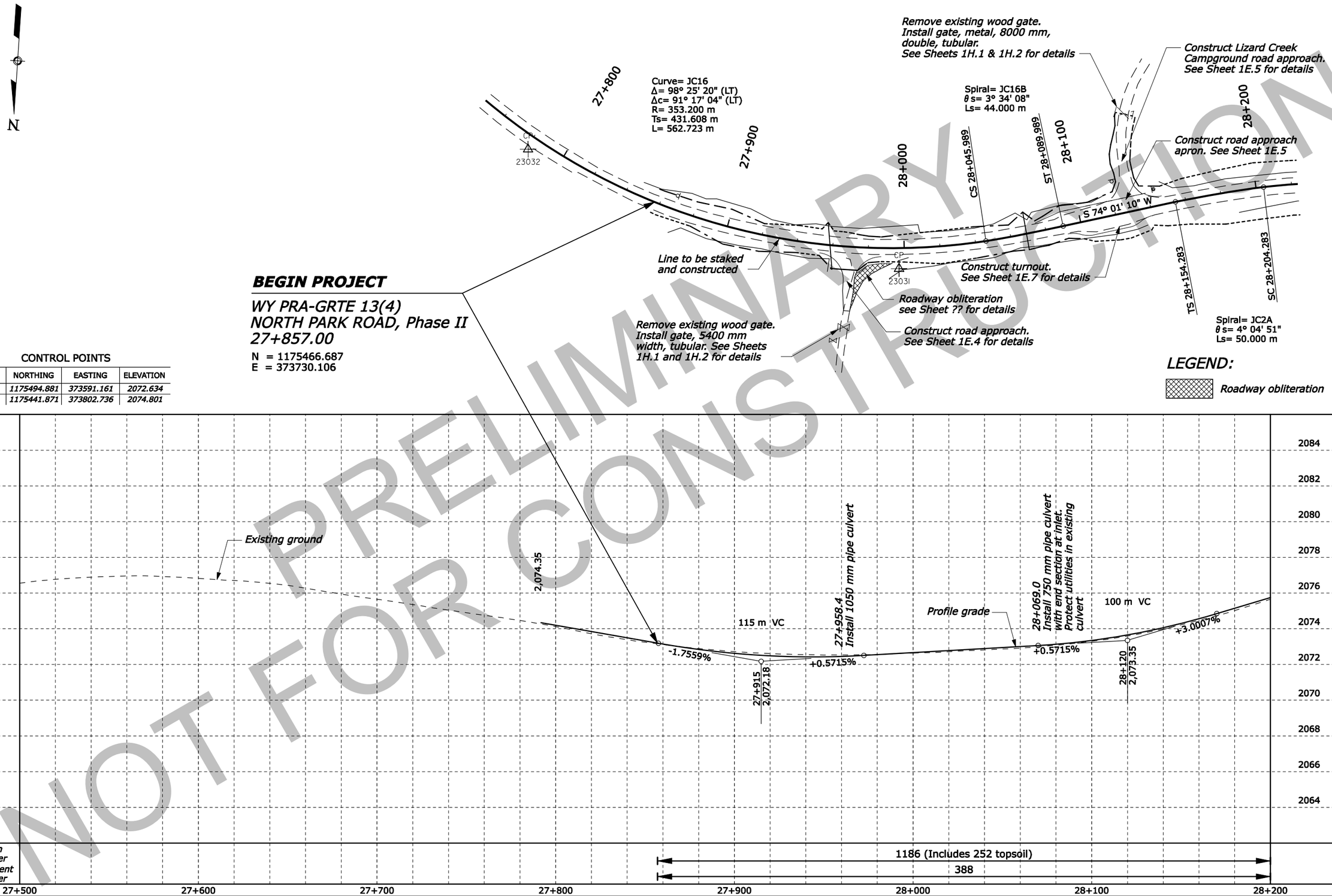

PRELIMINARY
NOT FOR CONSTRUCTION

Designed by: Juan Aguirre | Checked by: --/---- | --/----

26-OCT-2007 10:30AM

IP_PWP:dms01586\grte1304fa_V8.dgn [Default]

STATE	PROJECT	SHEET NUMBER
WA	PRA-GRTE 13(4)	1D.4

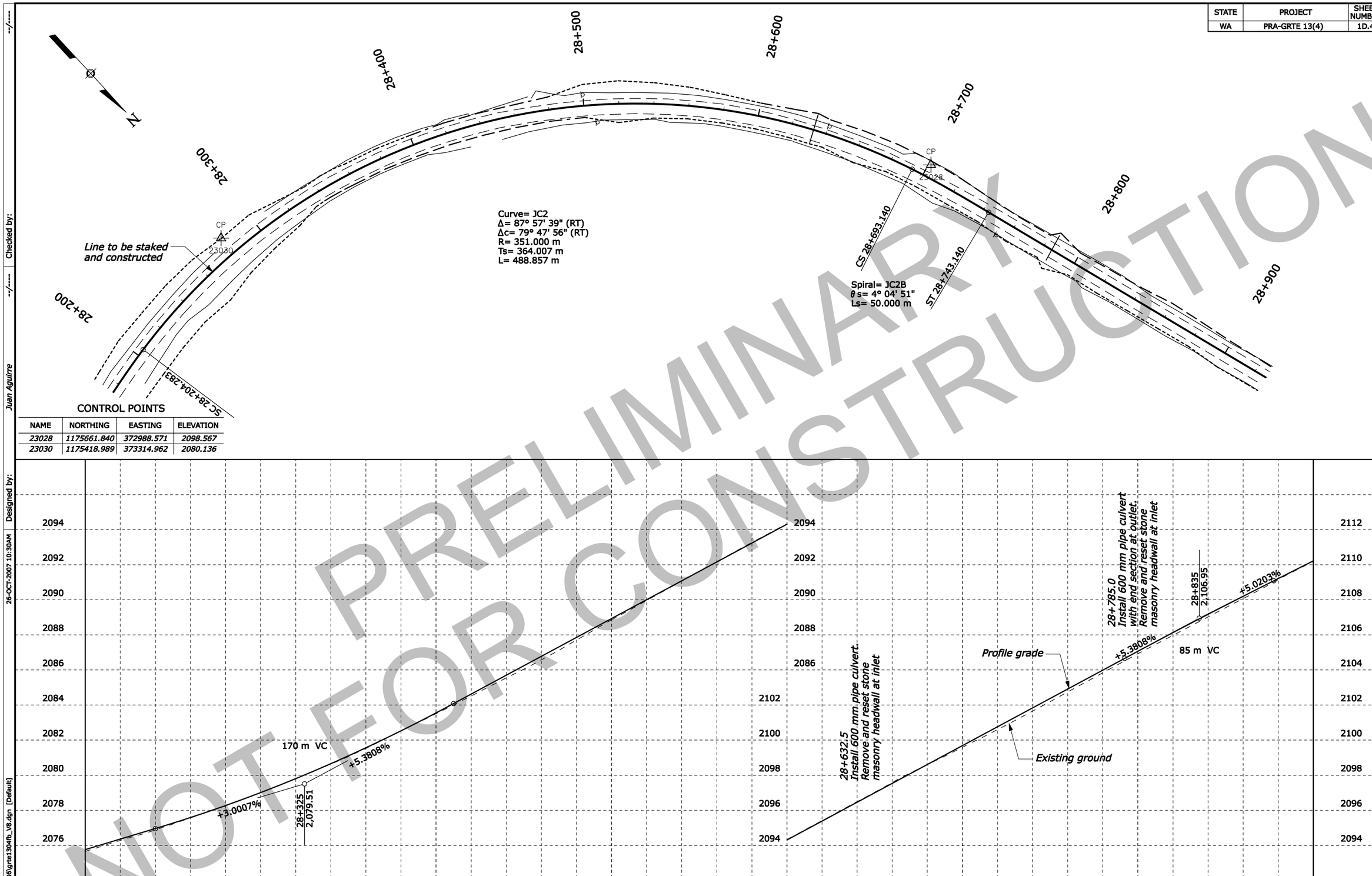

CONTROL POINTS

NAME	NORTHING	EASTING	ELEVATION
23028	1175661.840	372988.571	2098.567
23030	1175418.989	373314.962	2080.136

PRELIMINARY
NOT FOR CONSTRUCTION

Designed by: Juan Aguirre
26-OCT-2007 10:30AM
Checked by: --/----
--/----
IP_PWP:dms01596\grte1304fb_V8.dgn [Default]

STATE	PROJECT	SHEET NUMBER
WY	PRA-GRTE 13(4)	1D.5

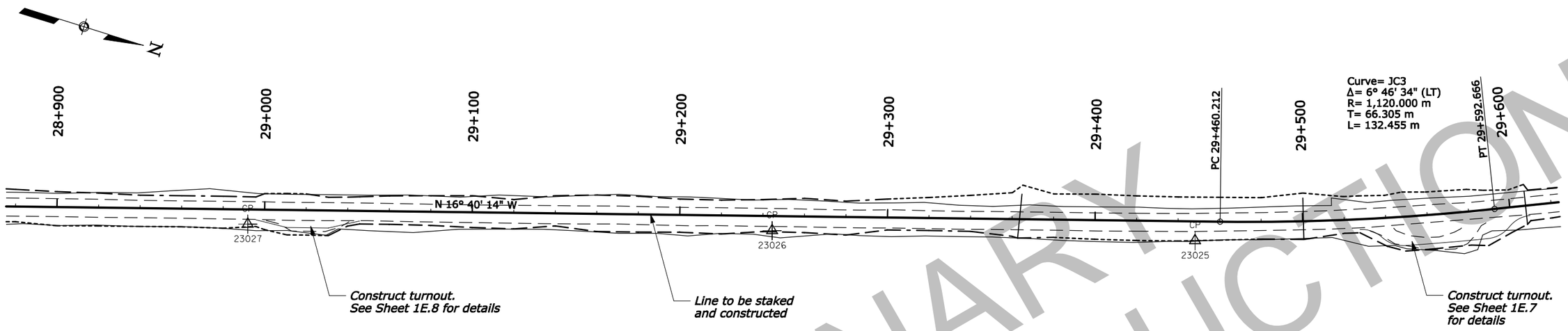

CONTROL POINTS

NAME	NORTHING	EASTING	ELEVATION
23025	1176382.161	372789.261	2137.625
23026	1176186.359	372845.536	2126.624
23027	1175944.375	372918.051	2114.350

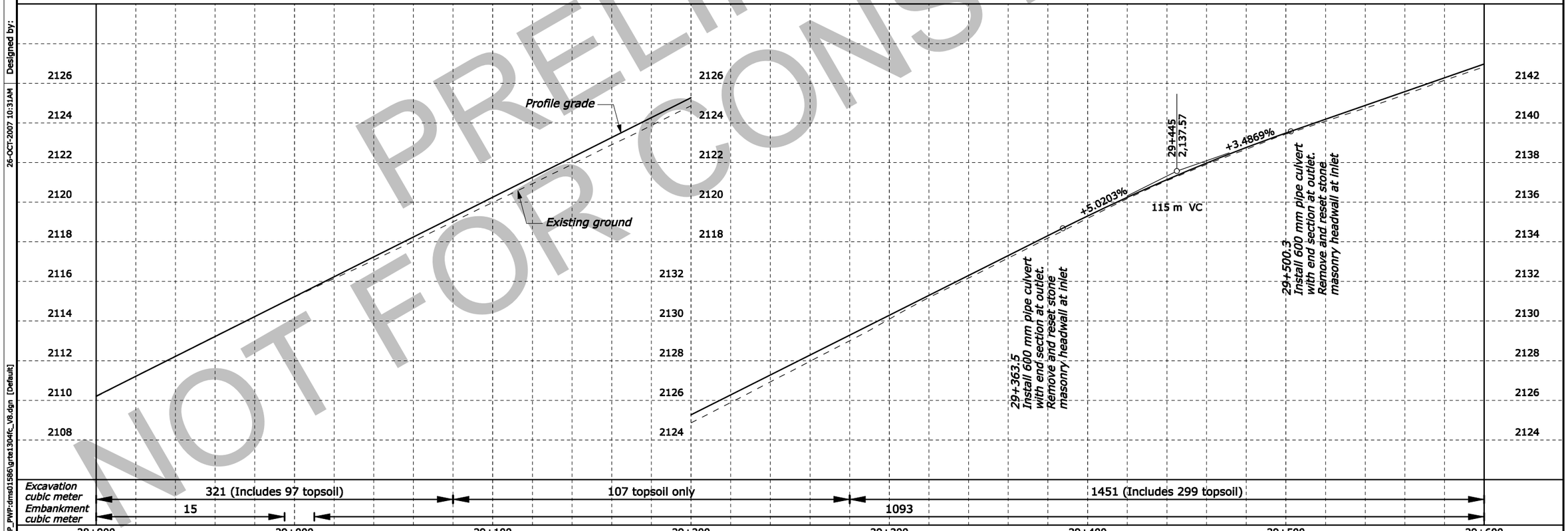

PRELIMINARY
NOT FOR CONSTRUCTION

--/---- Checked by:
--/---- Juan Aguirre
Designed by:
26-OCT-2007 10:31AM
IP_PWP:dms01586\grte1304fc_V8.dgn [Default]

STATE	PROJECT	SHEET NUMBER
WY	PRA-GRTE 13(4)	1D.6

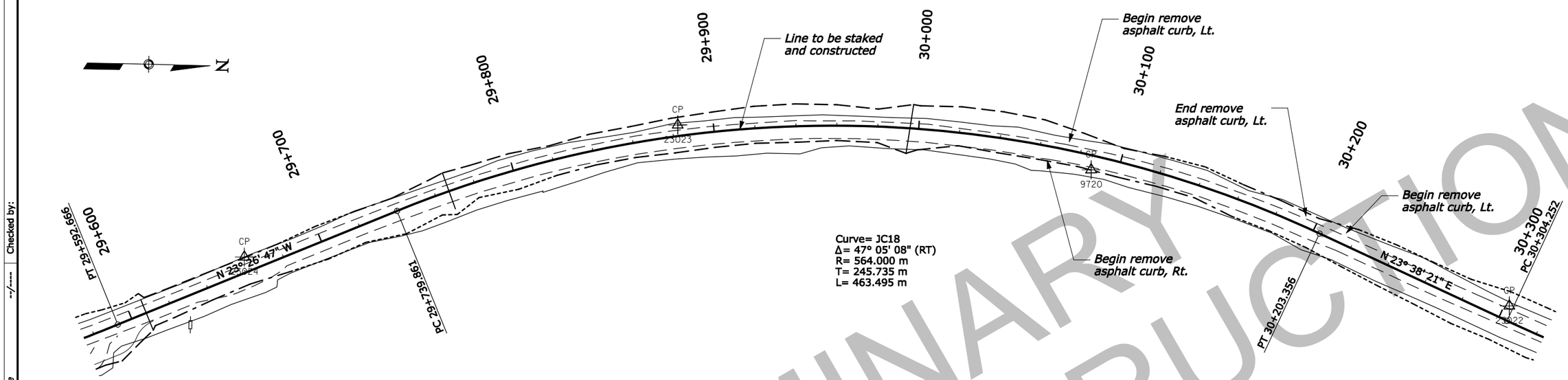

CONTROL POINTS

NAME	NORTHING	EASTING	ELEVATION
9720	1176988.681	372645.170	2167.508
23022	1177194.335	372706.908	2181.779
23023	1176786.385	372627.910	2154.648
23024	1176576.302	372697.141	2144.382

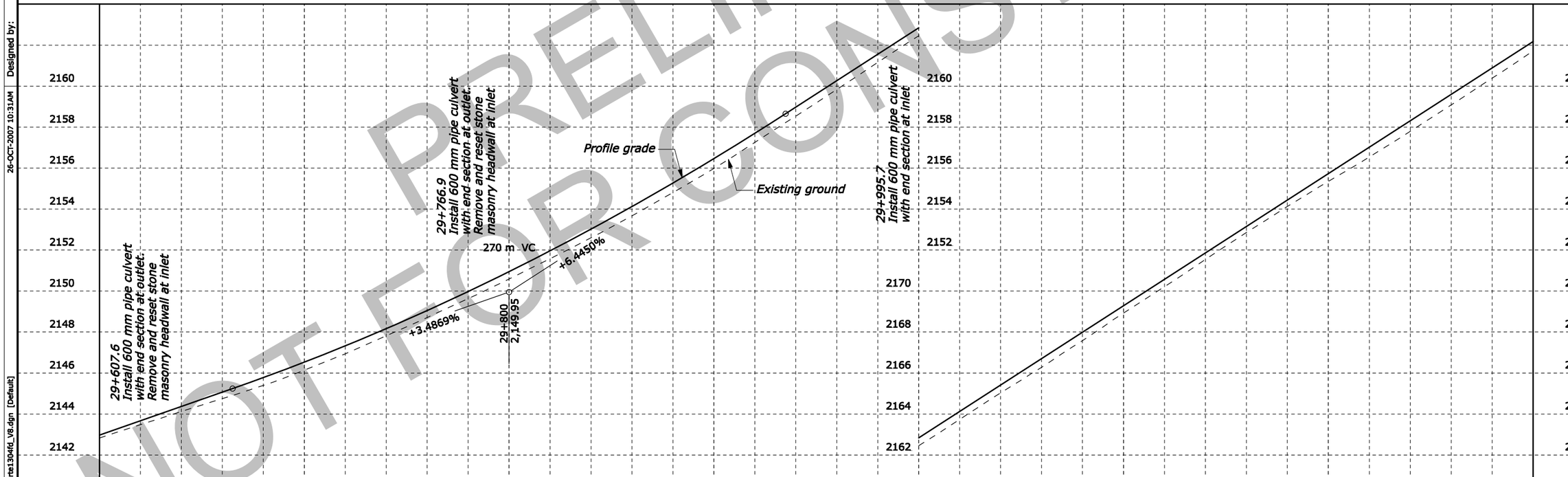

Excavation cubic meter	135 (Includes 94 topsoil)	193 topsoil only	638 (Includes 150 topsoil)
Embankment cubic meter	3860		

29+600 29+700 29+800 29+900 30+000 30+100 30+200 30+300

PRELIMINARY NOT FOR CONSTRUCTION

IP_PWP:dms01596\grte13D4fd_V8.dgn [Default] 26-OCT-2007 10:31AM Juan Aguirre Designed by: Checked by: --/---- --/----

STATE	PROJECT	SHEET NUMBER
WY	PRA-GRTE 13(4)	1D.7

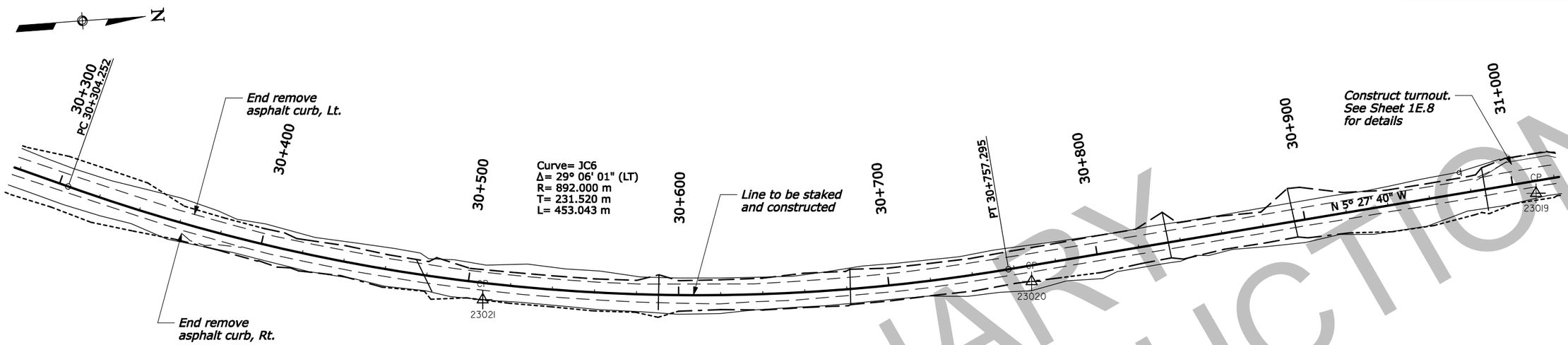

CONTROL POINTS

NAME	NORTHING	EASTING	ELEVATION
23019	1177888.352	372766.744	2218.494
23020	1177646.455	372791.511	2210.285
23021	1177385.871	372781.676	2195.582

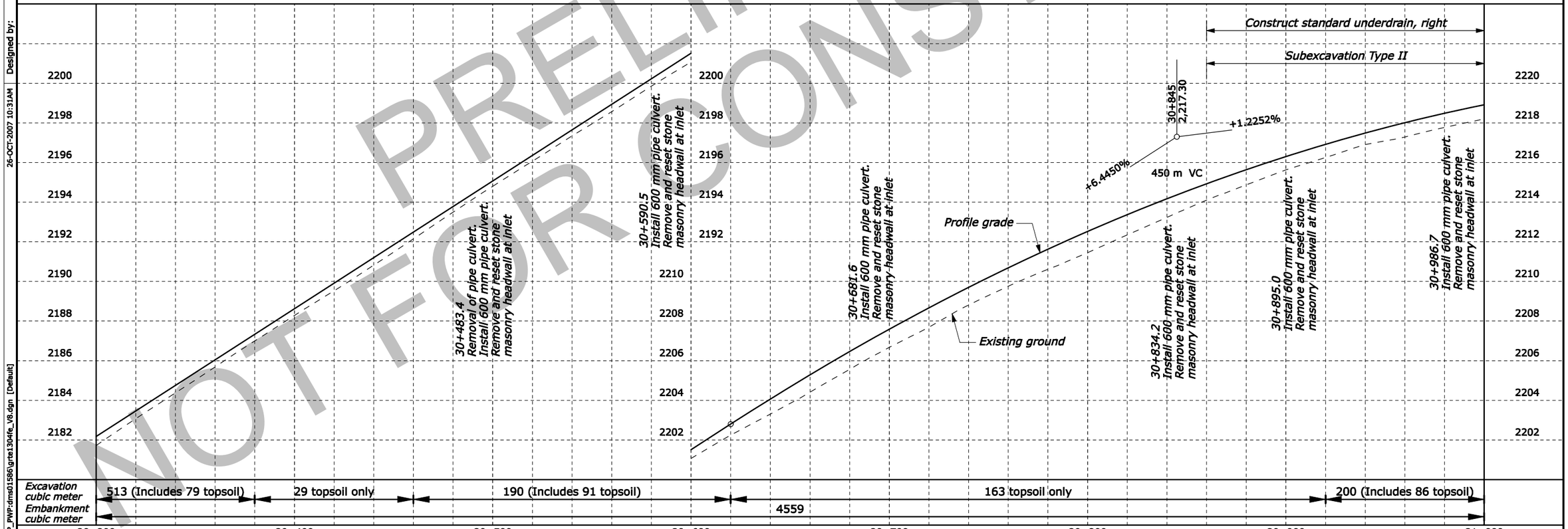

PRELIMINARY
NOT FOR CONSTRUCTION

--/---- Checked by: --/---- Juan Aguirre Designed by: 26-OCT-2007 10:31AM IP_PWP:dms01596\grte1304fe_V8.dgn [Default]

STATE	PROJECT	SHEET NUMBER
WY	PRA-GRTE 13(4)	1D.8

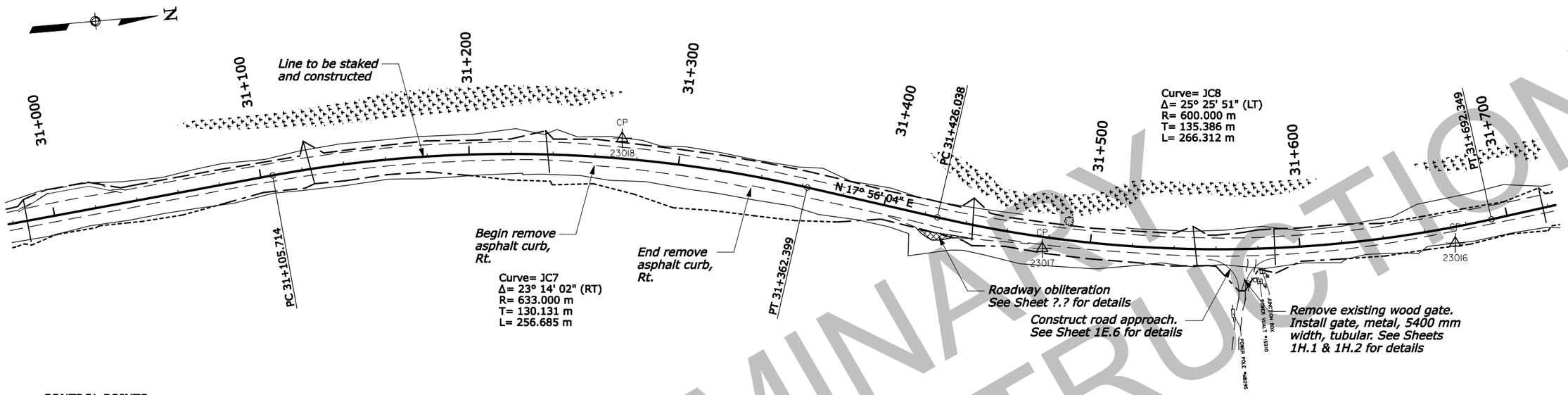

CONTROL POINTS

NAME	NORTHING	EASTING	ELEVATION
23016	1178541.506	372833.193	2227.544
23017	1178345.120	372818.496	2224.569
23018	1178150.276	372748.788	2221.484

LEGEND:

Designated wetlands

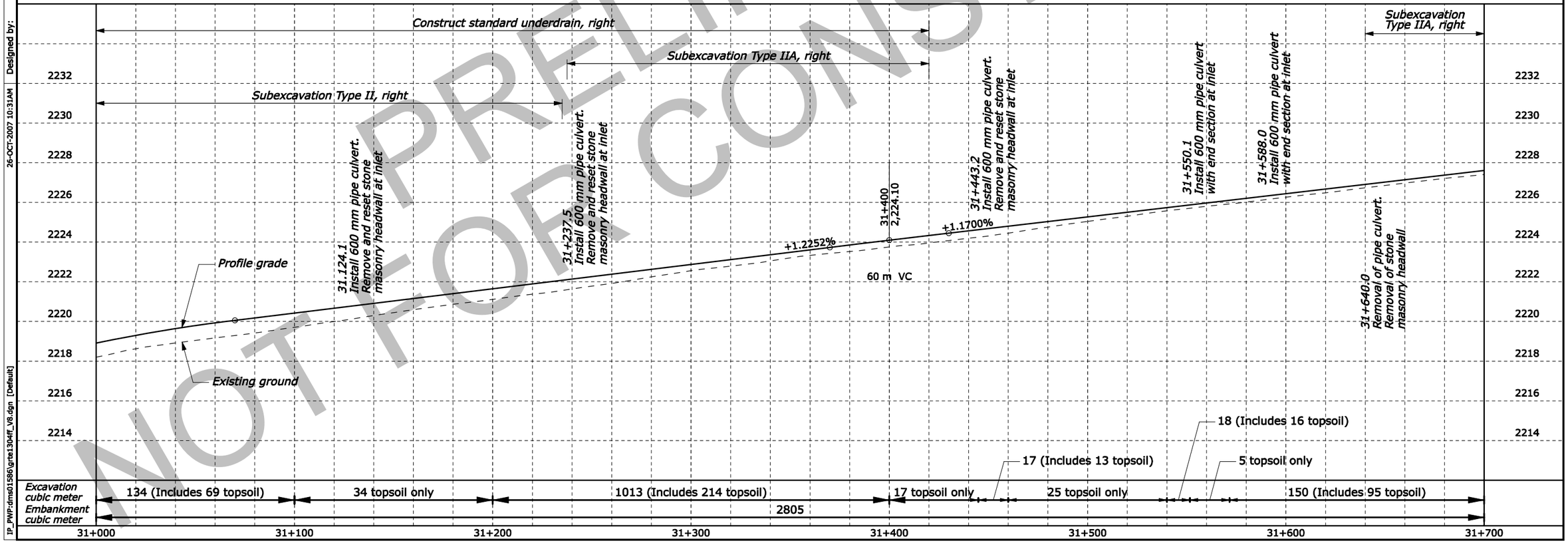

PRELIMINARY
NOT FOR CONSTRUCTION

Designed by: Juan Aguirre
Checked by:
26-OCT-2007 10:31AM
IP_PWP:dms01596\grte1304ff_V8.dgn [Default]

STATE	PROJECT	SHEET NUMBER
WY	PRA-GRTE 13(4)	1D.9

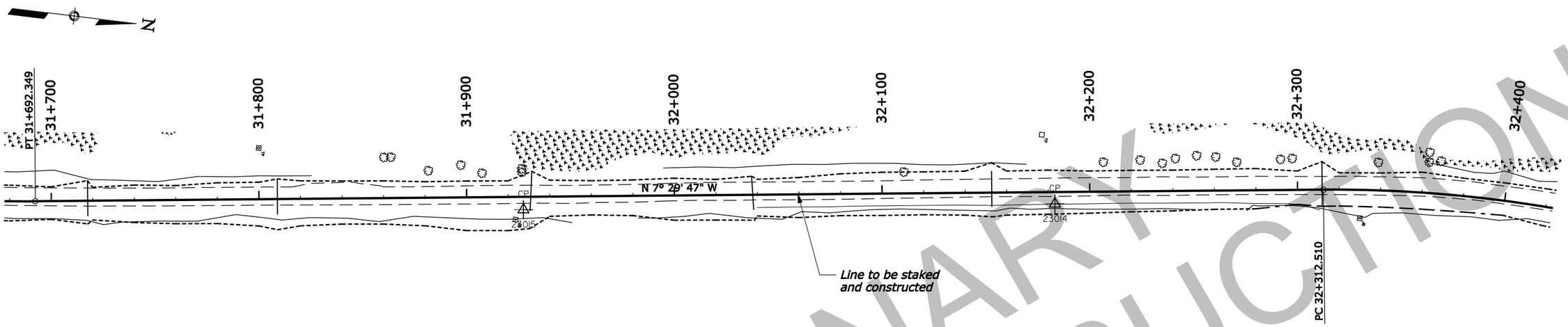

CONTROL POINTS

NAME	NORTHING	EASTING	ELEVATION
23014	1179047.022	372765.128	2235.982
23015	1178793.430	372798.992	2231.234

LEGEND:

Designated wetlands

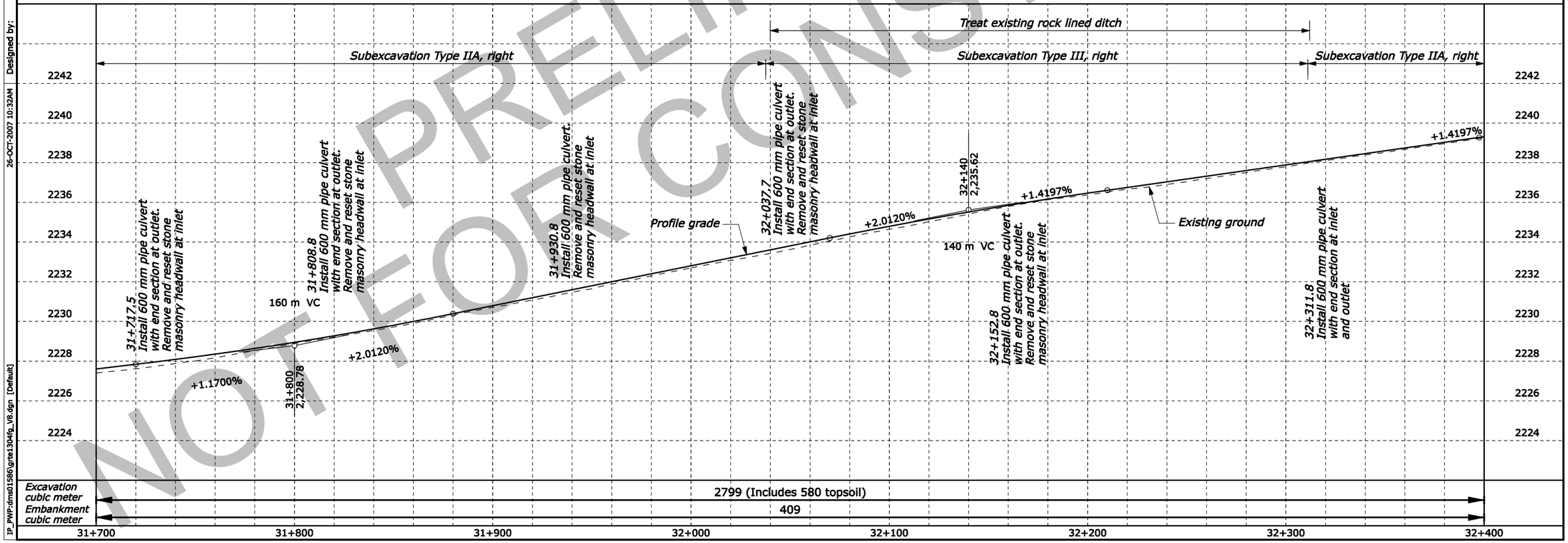

PRELIMINARY
NOT FOR CONSTRUCTION

Designed by: --/---- Checked by: --/---- Juan Aguirre 26-OCT-2007 10:32AM IP_PWP:dms01586\grte1304fg_V8.dgn [Default]

STATE	PROJECT	SHEET NUMBER
WY	PRA-GRTE 13(4)	1D.10

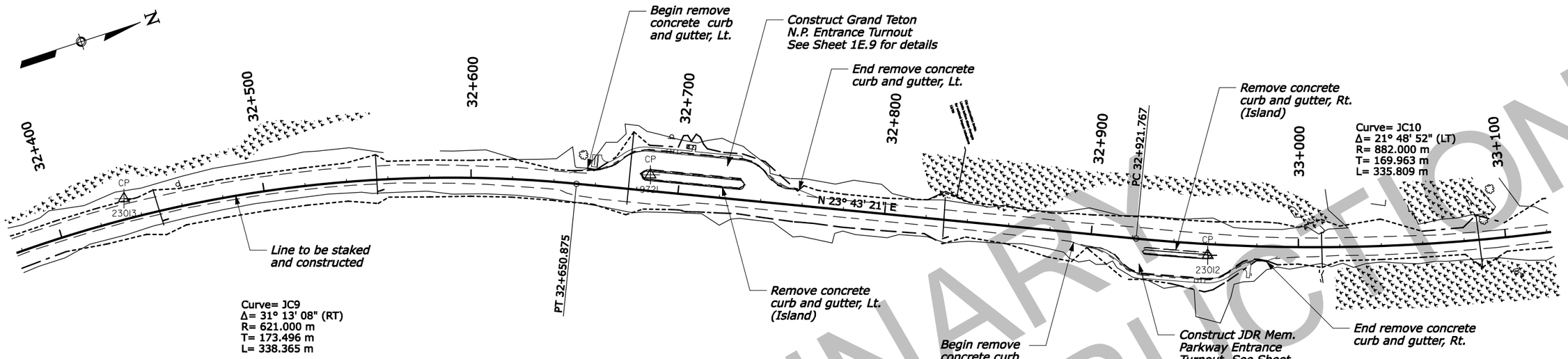

CONTROL POINTS

NAME	NORTHING	EASTING	ELEVATION
9721	1179540.637	372796.754	2241.851
23012	1179783.623	372917.144	2238.211
23013	1179296.100	372728.722	2239.647

LEGEND:

Designated wetlands

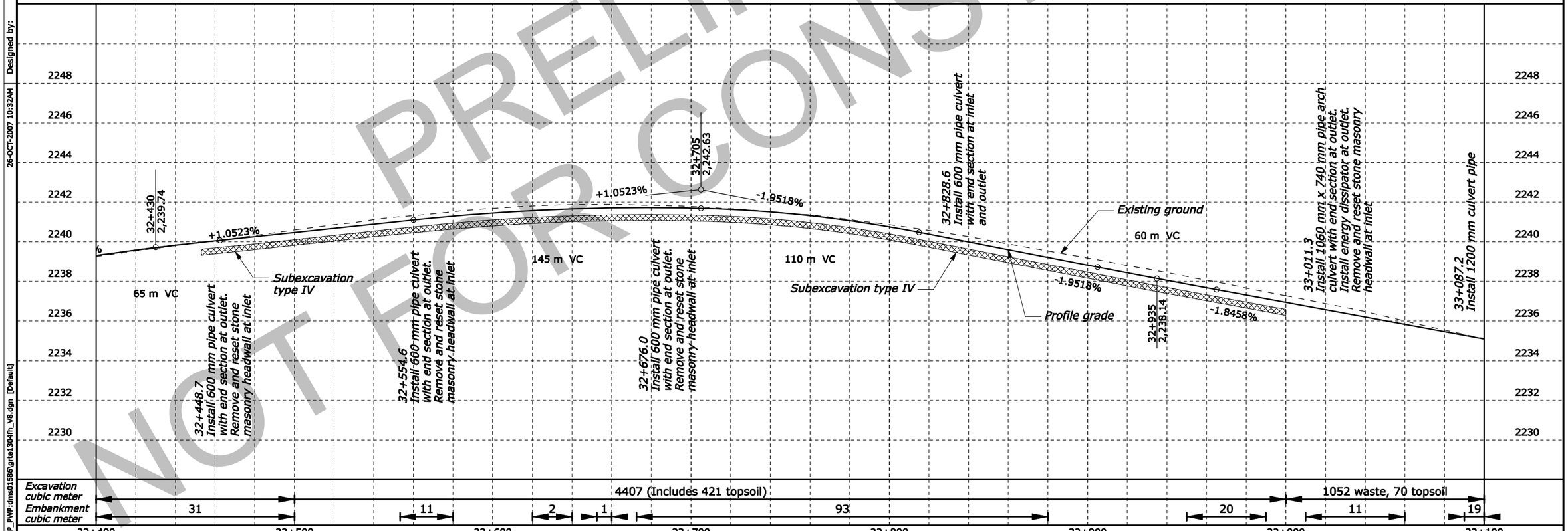

PRELIMINARY
NOT FOR CONSTRUCTION

Designed by: Juan Aguirre
Checked by:
26-OCT-2007 10:32AM
IP_PWP:dms01596\grte13044h_V8.dgn [Default]

STATE	PROJECT	SHEET NUMBER
WY	PRA-GRTE 13(4)	1D.11

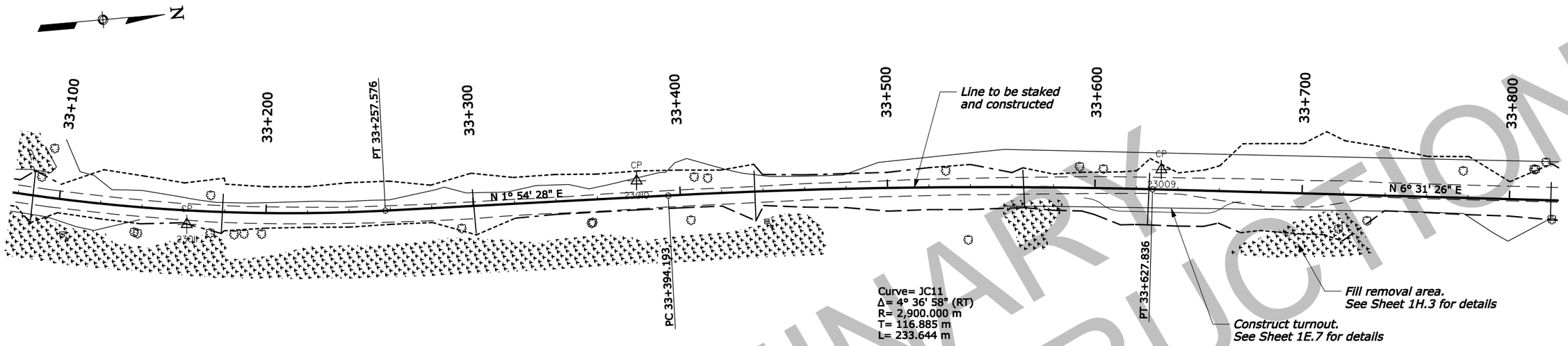

CONTROL POINTS

NAME	NORTHING	EASTING	ELEVATION
23009	1180453.405	372985.371	2225.975
23010	1180200.785	372968.909	2230.445
23011	1179982.884	372971.134	2233.694

LEGEND:

Designated wetlands

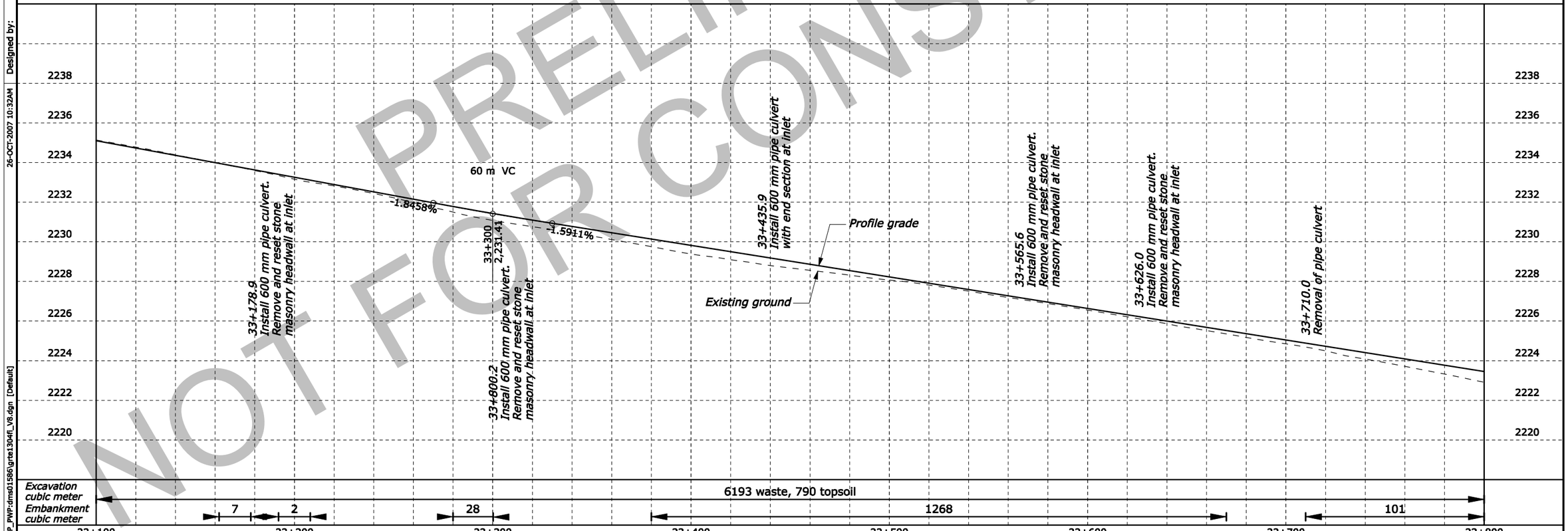

PRELIMINARY
NOT FOR CONSTRUCTION

IP_PWP:dms01586\grte1304fl_V8.dgn [Default] 26-OCT-2007 10:32AM Designed by: Juan Aguirre Checked by: --/---- --/----

STATE	PROJECT	SHEET NUMBER
WY	PRA-GRTE 13(4)	1D.12

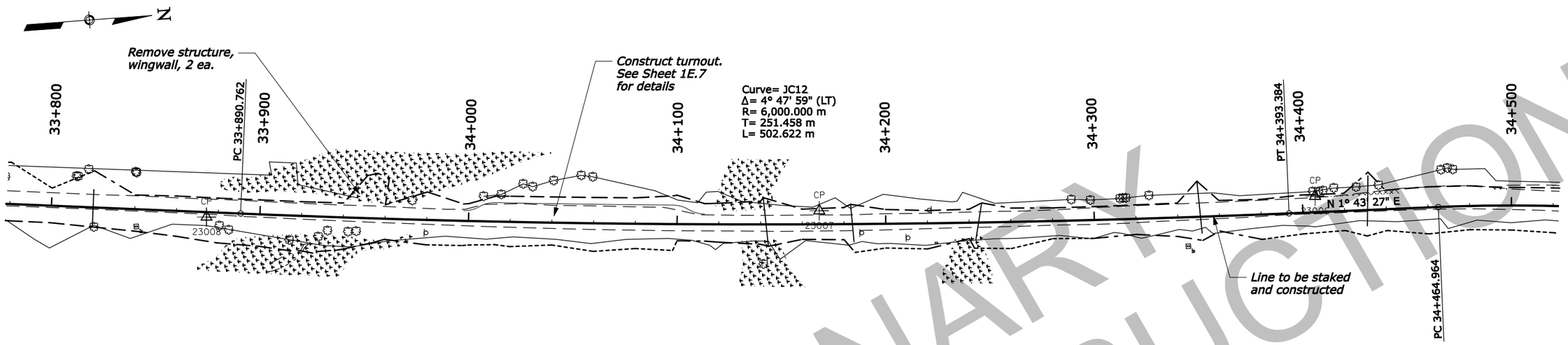

CONTROL POINTS

NAME	NORTHING	EASTING	ELEVATION
23006	1181223.833	373053.218	2214.560
23007	1180986.292	373043.045	2219.304
23008	1180693.149	373024.845	2221.428

LEGEND:

Designated wetlands

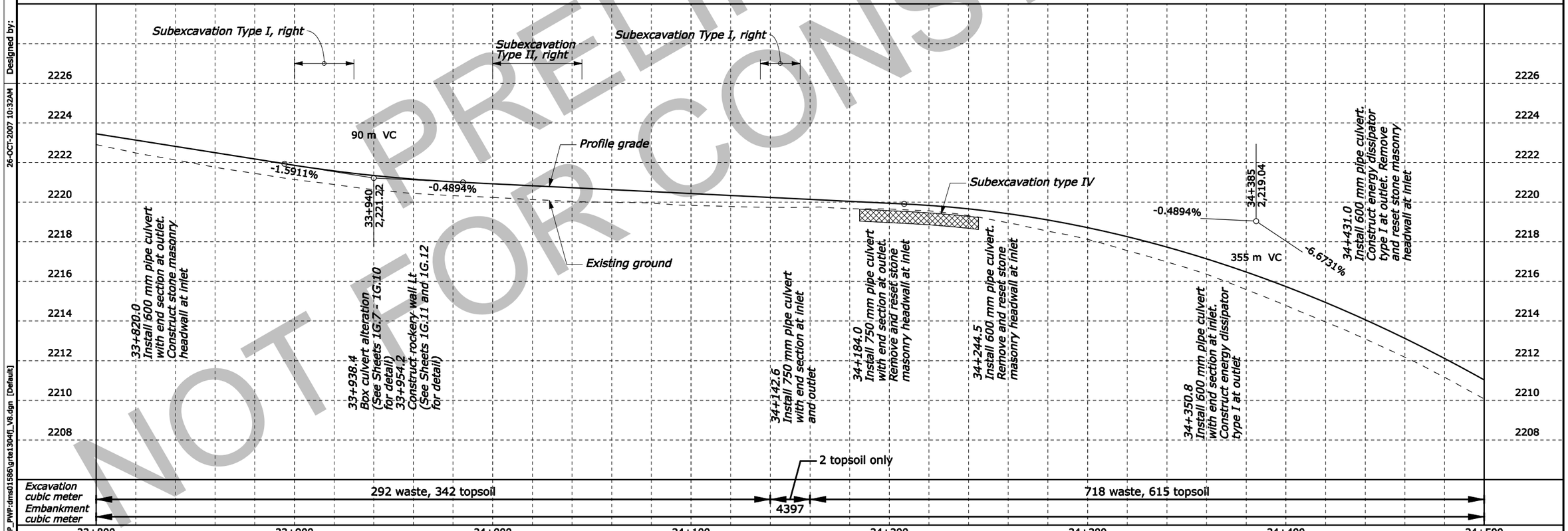

PRELIMINARY NOT FOR CONSTRUCTION

Designed by: Juan Aguirre
Checked by:
26-OCT-2007 10:32AM
IP_PWP:dms01596\grte13041_V8.dgn [Default]

STATE	PROJECT	SHEET NUMBER
WY	PRA-GRTE 13(4)	1D.13

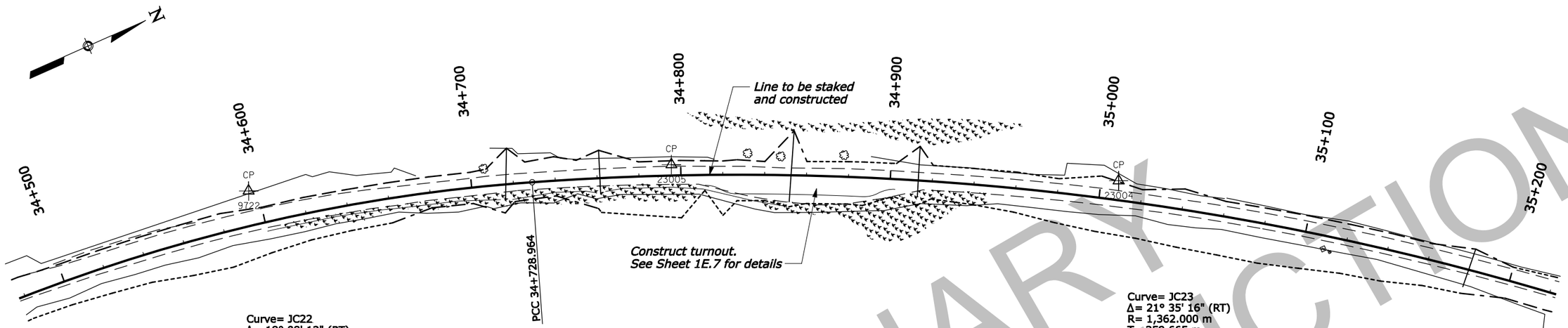

CONTROL POINTS

NAME	NORTHING	EASTING	ELEVATION
9722	1181415.276	373060.659	2202.948
23004	1181796.508	373225.025	2181.590
23005	1181604.669	373131.239	2191.061

LEGEND:

Designated wetlands

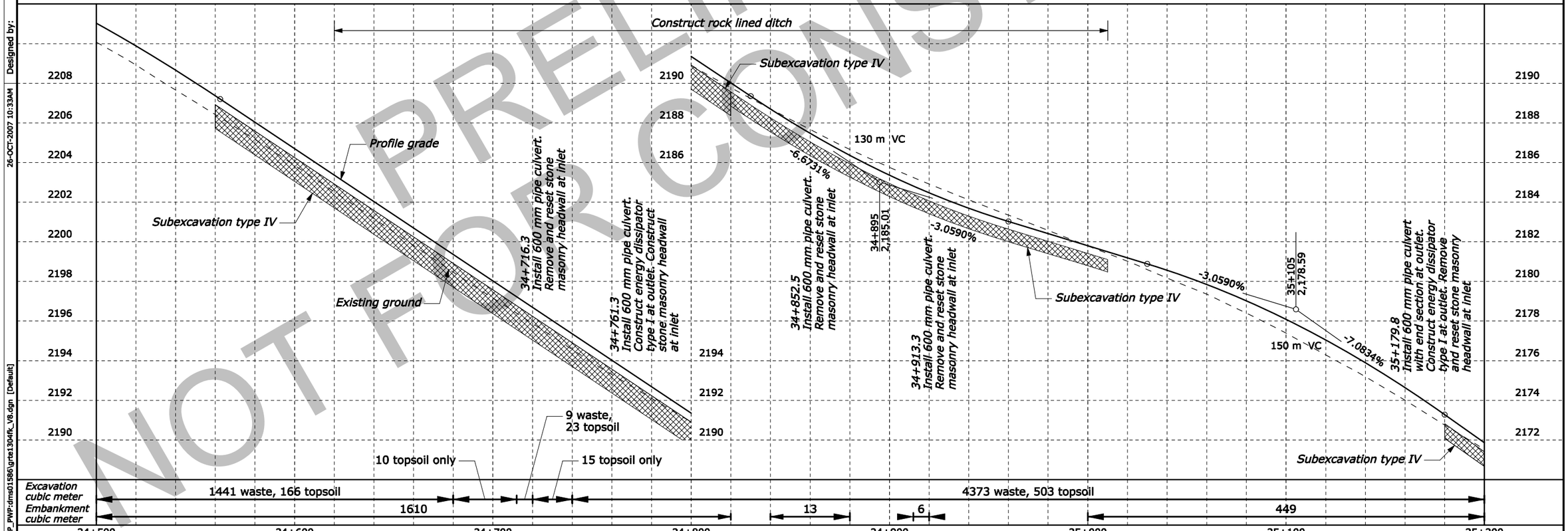

PRELIMINARY NOT FOR CONSTRUCTION

Designed by: --/---- Checked by: --/---- Juan Aguirre 26-OCT-2007 10:33AM IP_PWP:dms01596\grte1304fk_V8.dgn [Default]

STATE	PROJECT	SHEET NUMBER
WY	PRA-GRTE 13(4)	1D.14

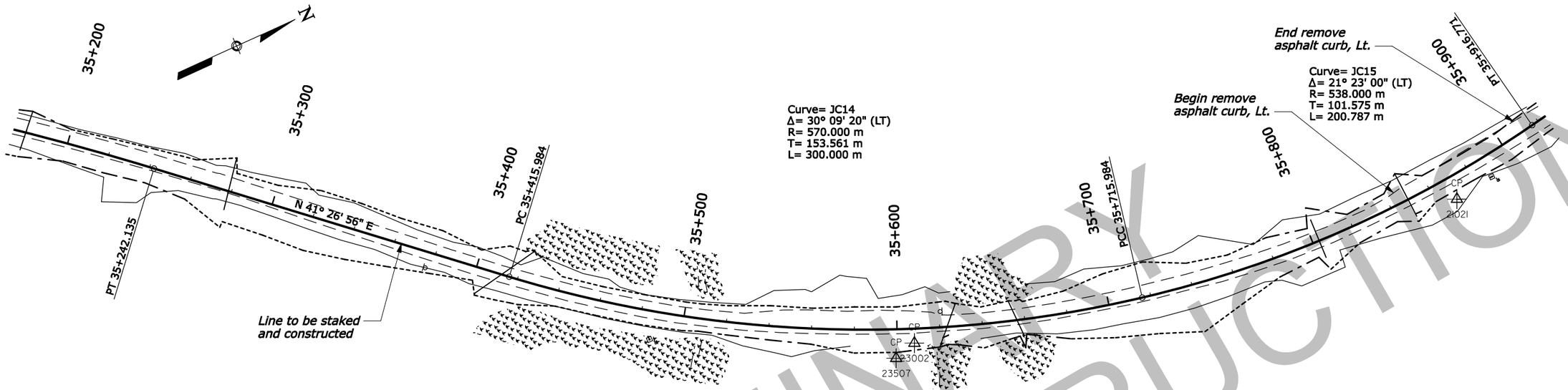

CONTROL POINTS

NAME	NORTHING	EASTING	ELEVATION
21021	1182528.588	373637.840	2142.671
23002	1182269.448	373594.011	2154.285
23507	1182258.734	373596.943	2156.455

LEGEND:

Designated wetlands

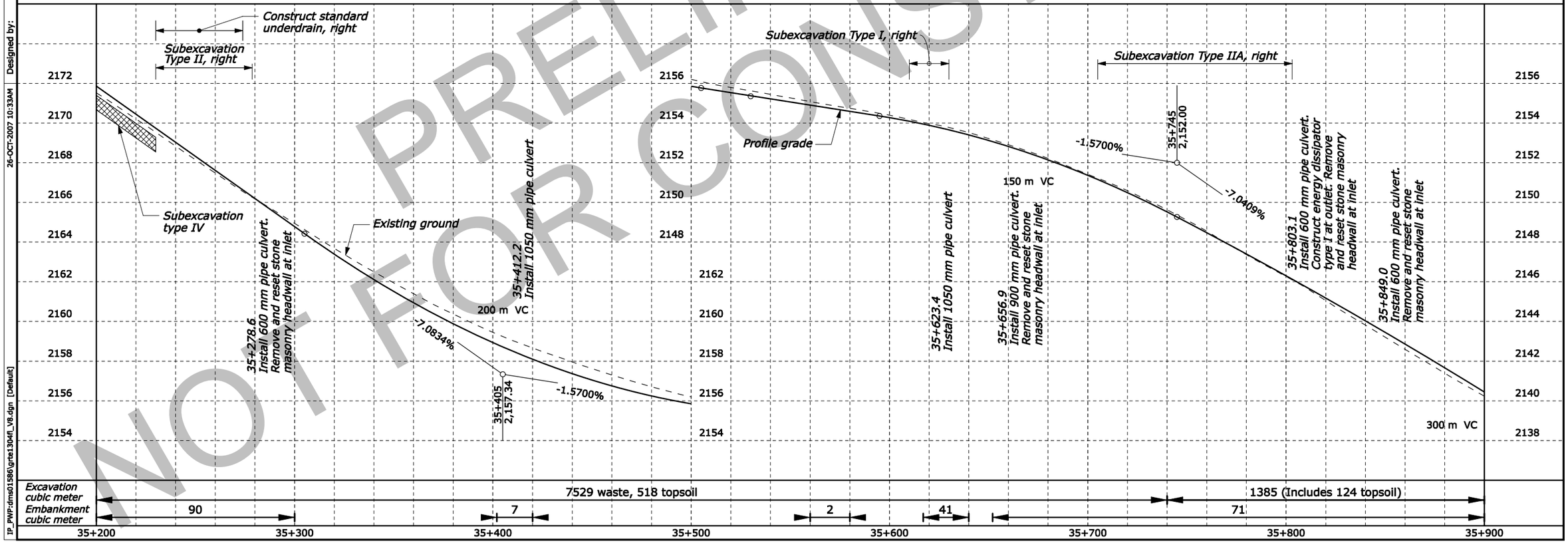

PRELIMINARY NOT FOR CONSTRUCTION

Designed by: Juan Aguirre | Checked by: --/---- | 26-OCT-2007 10:33AM | IP_PWP:dms01596\grte1304fl_V8.dgn [Default]

STATE	PROJECT	SHEET NUMBER
WY	PRA-GRTE 13(4)	1D.15

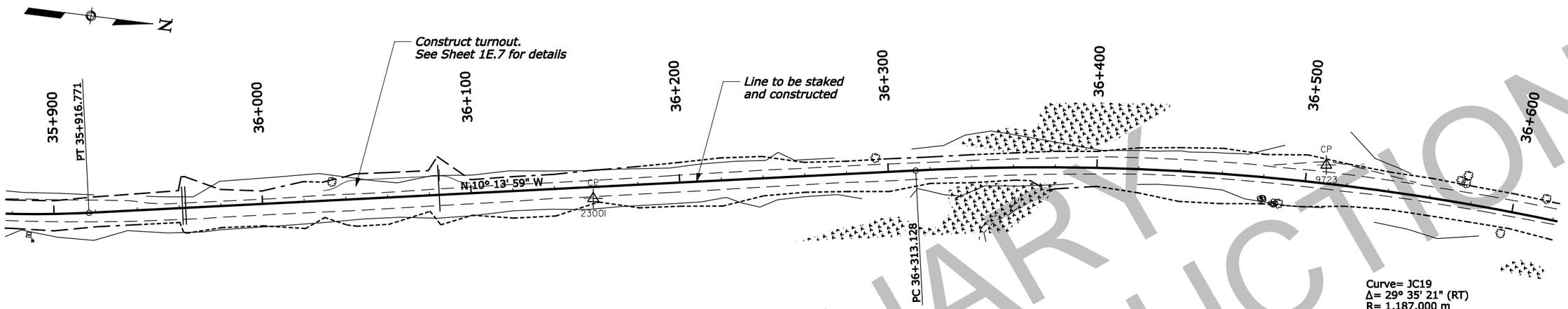

Curve= JC19
Δ= 29° 35' 21" (RT)
R= 1,187.000 m
T= 313.499 m
L= 613.000 m

CONTROL POINTS

NAME	NORTHING	EASTING	ELEVATION
9723	1183159.795	373522.867	2099.547
23001	1182813.645	373583.397	2122.915

LEGEND:

Designated wetlands

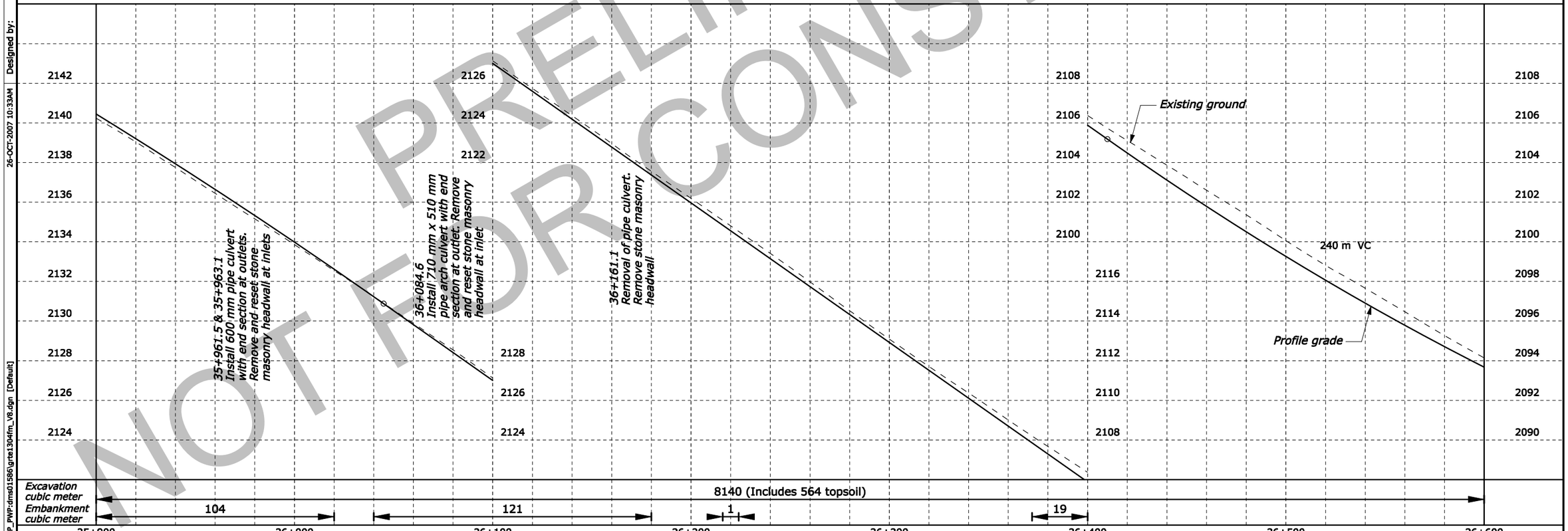

PRELIMINARY
NOT FOR CONSTRUCTION

Designed by: Checked by: Juan Aguirre 26-OCT-2007 10:33AM IP_PWP:dms01586\grte1304fm_V8.dgn [Default]

STATE	PROJECT	SHEET NUMBER
WY	PRA-GRTE 13(4)	1D.16

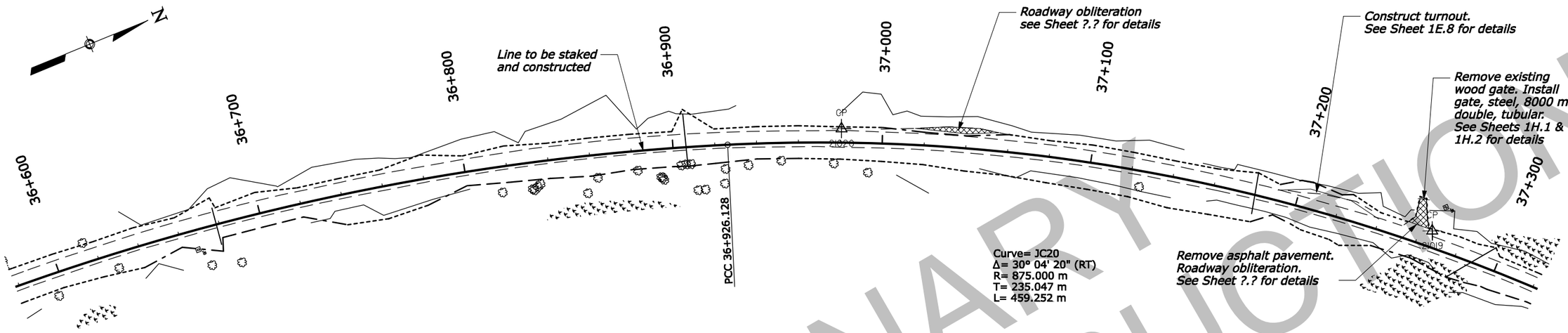

CONTROL POINTS

NAME	NORTHING	EASTING	ELEVATION
21019	1183865.334	373764.068	2079.554
21020	1183622.667	373612.125	2085.606

LEGEND:

- Roadway obliteration
- Designated wetlands

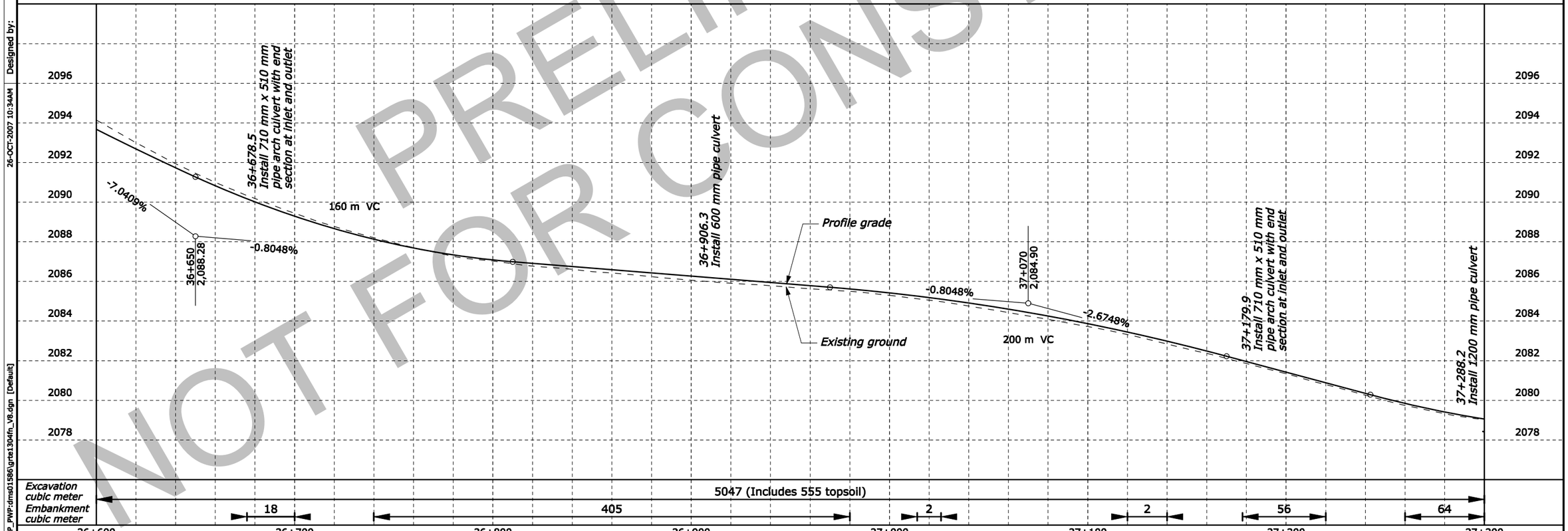

PRELIMINARY NOT FOR CONSTRUCTION

Designed by: Checked by: Juan Aguirre 26-OCT-2007 10:34AM IP_PWP:dms01596\grte1304fn_V8.dgn [Default]

STATE	PROJECT	SHEET NUMBER
WY	PRA-GRTE 13(4)	1D.17

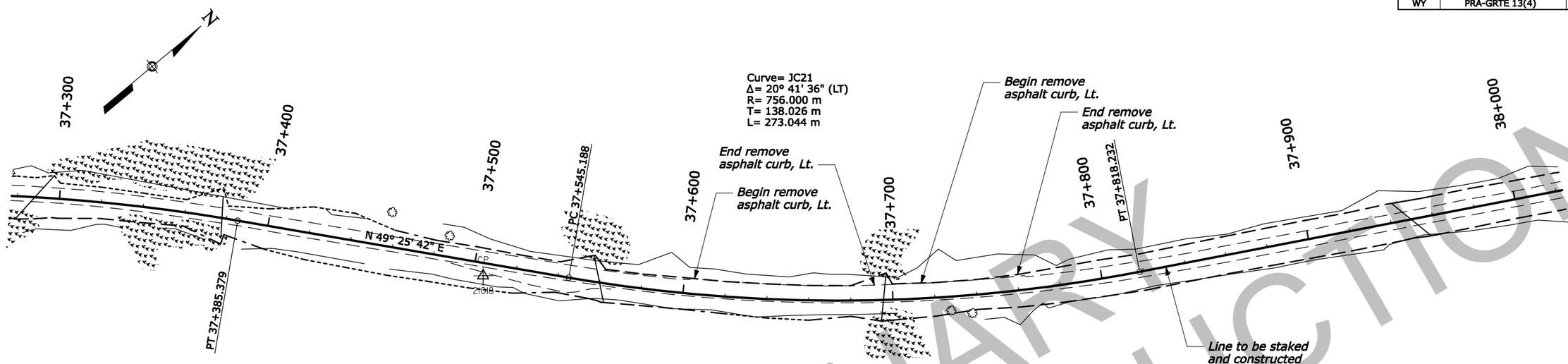

CONTROL POINTS

NAME	NORTHING	EASTING	ELEVATION
21018	1184017.112	373949.821	2078.994

LEGEND:

Designated wetlands

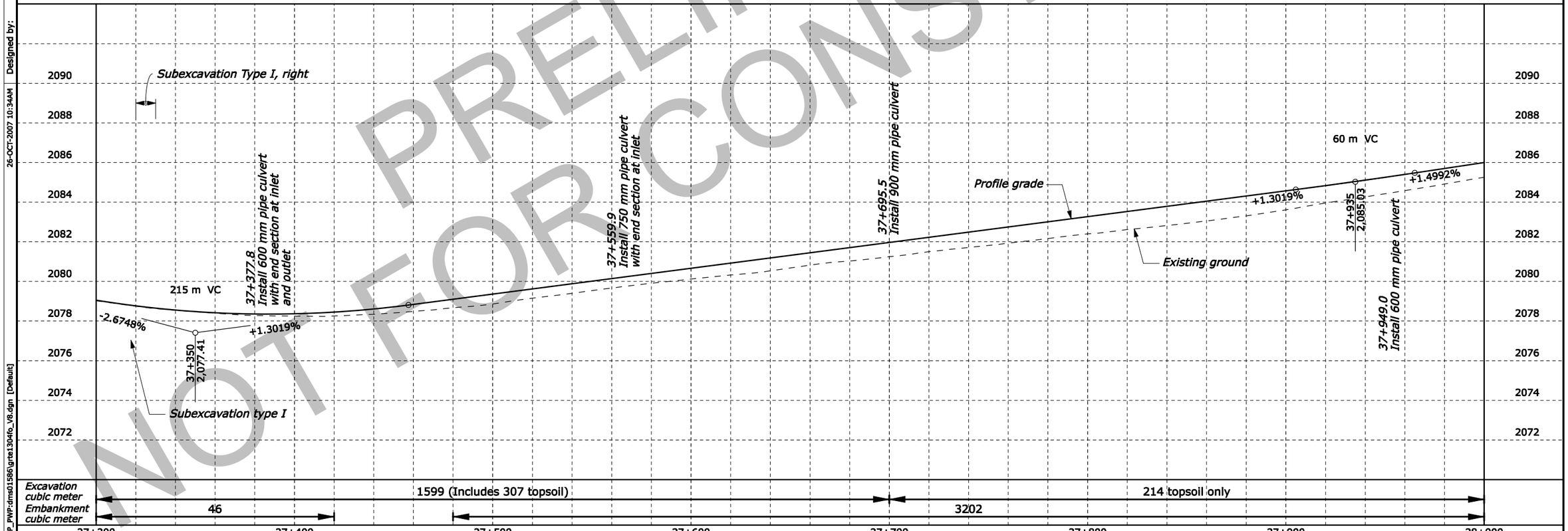

PRELIMINARY
NOT FOR CONSTRUCTION

--/---- Checked by: --/---- Juan Aguirre Designed by: 26-OCT-2007 10:34AM IP_PWP:dms01586\grte13040_V8.dgn [Default]

STATE	PROJECT	SHEET NUMBER
WY	PRA-GRTE 13(4)	1D.18

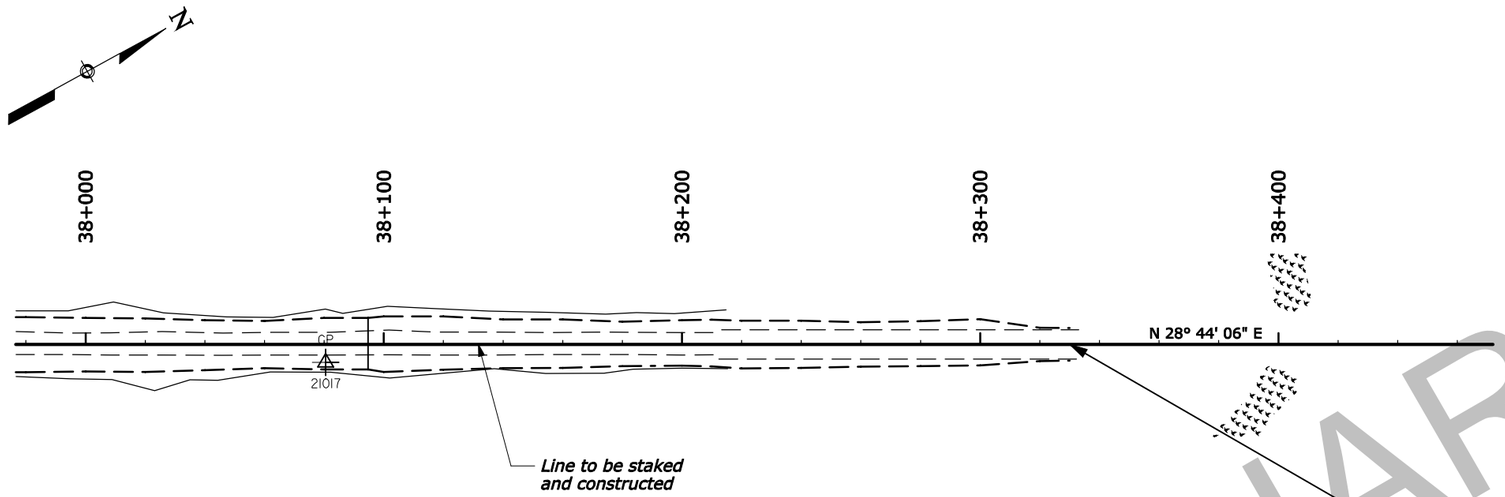

END PROJECT

WY PRA-GRTE 13(4)
NORTH PARK ROAD, PHASE II
38+330.00

N = 1184707.486
E = 374393.750

LEGEND:

Designated wetlands

CONTROL POINTS

NAME	NORTHING	EASTING	ELEVATION
21017	1184485.821	374279.115	2086.164

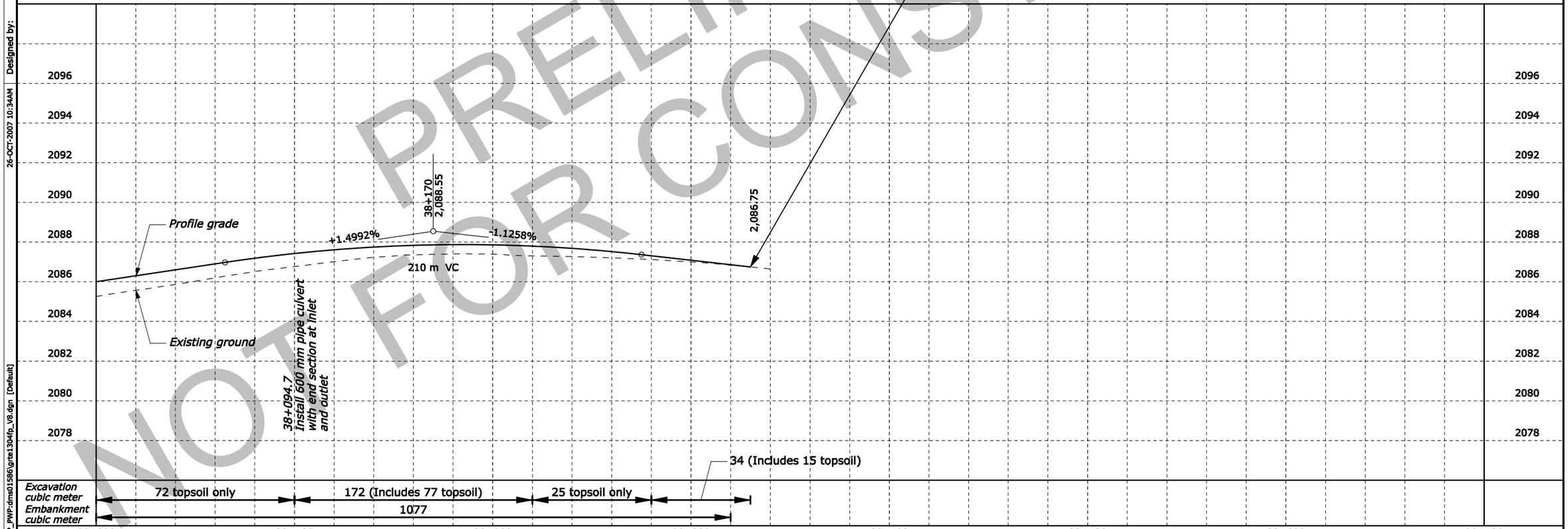

PRELIMINARY
NOT FOR CONSTRUCTION

--/---- Juan Aguirre Checked by: --/---- Juan Aguirre Designed by: 26-OCT-2007 10:34AM IP_PWP:dms01586\grte1304fp_V8.dgn [Default]

STATE	PROJECT	SHEET NUMBER
WY	PRA-GRTE 13(4)	1E.5

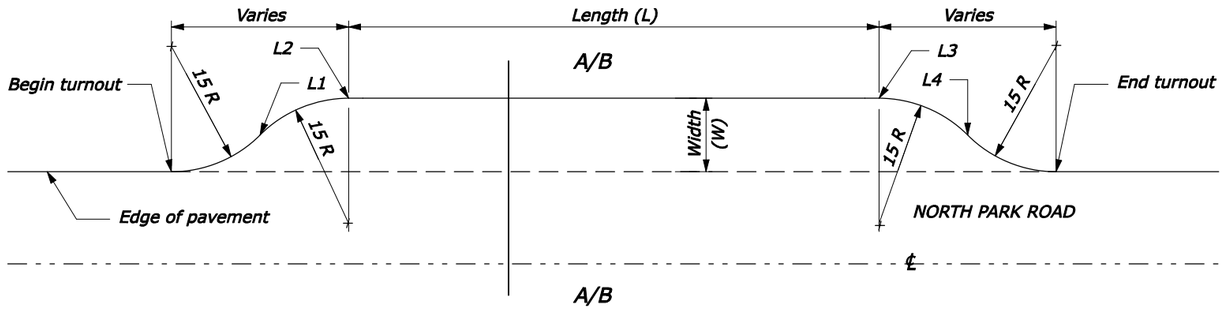

PLAN
PAVED TURNOUT

PAVED TURNOUT DIMENSIONS

STATION TO STATION	L	W	SECTION	L1 INFLECTION POINT	L2	L3	L4 INFLECTION POINT
28+091.63 to 28+140.13	20	3.6	A-A	28+133.01	28+125.88	28+105.88	28+098.76
29+527.30 to 29+609.44	40	9.0	A-A	29+598.73	29+588.02	29+548.55	29+537.83
33+594.73 to 33+670.84	40	6.0	B-B	33+661.84	33+652.84	33+612.78	33+603.79
33+997.45 to 34+113.24	85	4.2	B-B	34+005.13	34+012.78	34+097.91	34+105.56
34+811.38 to 34+902.56	60	4.2	B-B	34+894.79	34+887.17	34+826.76	34+819.14
36+029.38 to 36+100.00	40	4.2	B-B	36+037.04	36+044.69	36+084.69	36+092.35

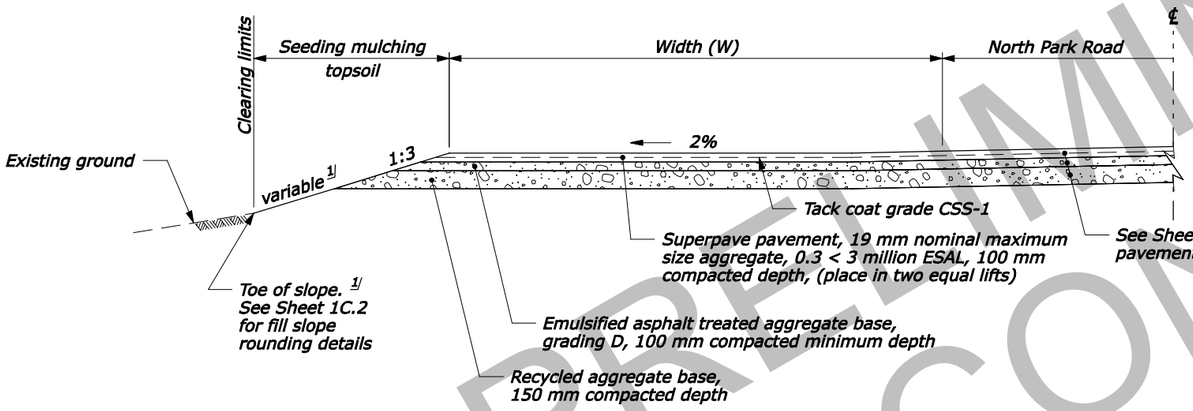

SECTION A-A

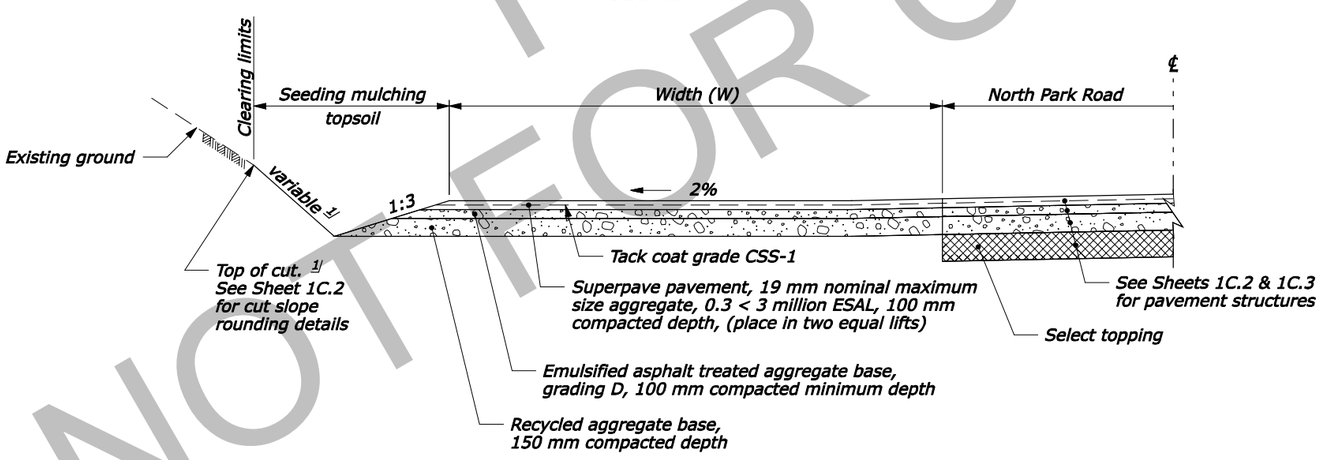

SECTION B-B

LEGEND:

+ Radial points

NOTE:

1. Quantities are included in mainline quantities.
2. Dimensions without units are meters.

FOOTNOTE:

1/ Construct slopes as shown in the Staking Report Data Listing (see FAR Clause 52.2364).

NPS Pkg. No. 54252 NPS Drwg. No. 136/80197

PAVED TURNOUT DETAILS
NORTH PARK ROAD

PRELIMINARY
NOT FOR CONSTRUCTION

--/---- Checked by:
--/---- Designed by:
26-OCT-2007 10:34AM
IP_PWP:dms01587\grte1304rd.dgn [Metric_2D]

STATE	PROJECT	SHEET NUMBER
WY	PRA-GRTE 13(4)	1E.7

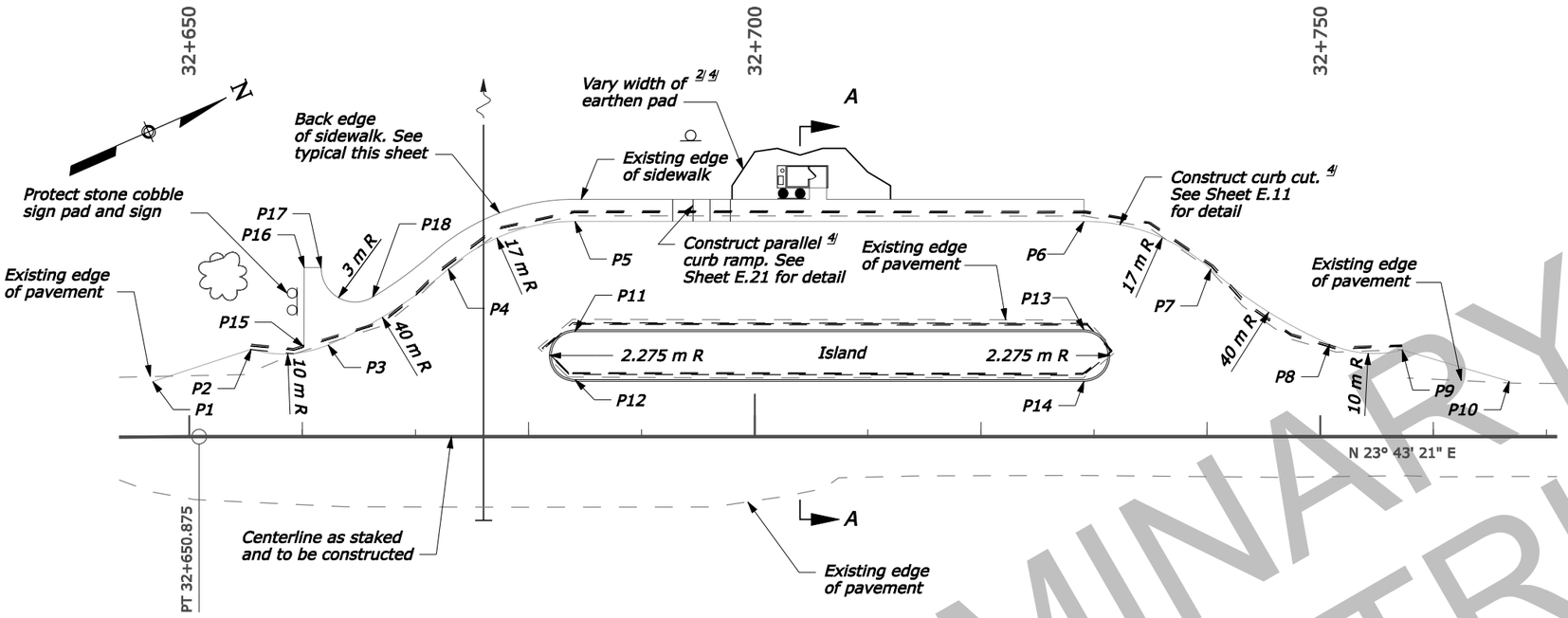

PLAN

NOTE:

1. Points P1-P14 are to the edge of pavement.
2. Points P15-P20 are to the back edge of sidewalk.
3. Points P21-P24 are to the outside corner of the vault toilet building.
4. See Sheets 1E.11 & 1E.12 for portland cement concrete curb and gutter, and sidewalk details.
5. See Sheet 1K.6 for pavement marking layout & sign locations.
6. Dimensions without units are meters.

FOOTNOTE:

1/ Superelevate roadway on curves at the rate "e" as indicated in the curve data shown on the plan and profile and in the Staking Report Data Listing (see FAR Clause 52.236.4).

2/ Construct slopes as shown in the Staking Report Data Listing.

3/ Place conserved topsoil, mulching and seeding as shown on Typical Section on Sheet 1C.2.

4/ Verify final location with the C.O.

LAYOUT INFORMATION

POINT	LOCATION	NOTE	POINT	LOCATION	NOTE	POINT	LOCATION	NOTE
P1	Sta.= 32+646.807 Offset= 4.900	Begin widening for turnout	P7	Sta.= 32+740.328 Offset= 14.830	Begin radius	P13	Sta.= 32+729.118 Offset= 9.450	Begin radius
P2	Sta.= 32+655.484 Offset= 7.733	Begin radius	P8	Sta.= 32+750.841 Offset= 8.181	Begin radius	P14	Sta.= 32+729.118 Offset= 4.900	End radius
P3	Sta.= 32+662.284 Offset= 8.126	Begin radius	P9	Sta.= 32+757.255 Offset= 7.665	End radius	P15	Sta.= 32+660.143 Offset= 7.929	Begin sidewalk
P4	Sta.= 32+672.902 Offset= 14.826	Begin radius	P10	Sta.= 32+766.706 Offset= 4.900	End widening for turnout	P16	Sta.= 32+660.176 Offset= 14.964	Begin sidewalk
P5	Sta.= 32+684.118 Offset= 19.050	End radius	P11	Sta.= 32+684.118 Offset= 9.450	Begin radius	P17	Sta.= 32+661.675 Offset= 14.922	Begin sidewalk, begin radius
P6	Sta.= 32+729.118 Offset= 19.050	Begin radius, end sidewalk	P12	Sta.= 32+684.118 Offset= 4.900	End radius	P18	Sta.= 32+666.230 Offset= 12.343	End radius

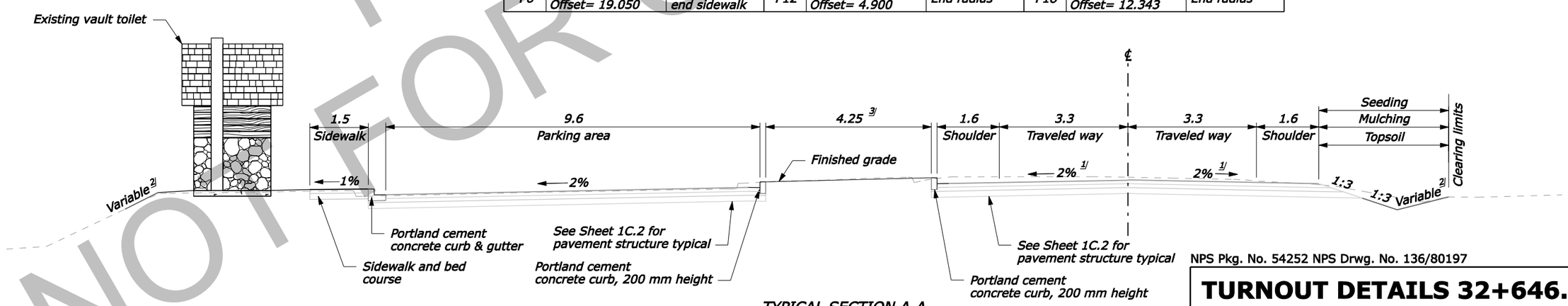

TYPICAL SECTION A-A

NO SCALE

NPS Pkg. No. 54252 NPS Drwg. No. 136/80197

TURNOUT DETAILS 32+646.80
GRAND TETON NP ENTRANCE
NORTH PARK ROAD

PRELIMINARY
NOT FOR CONSTRUCTION

C:\Wyfiles\PW_Production\LLTuttle\dms01597\grte13041r.dgn
DATE " + " _FILE_ | Designed by: | Checked by: | --/---- | --/----

STATE	PROJECT	SHEET NUMBER
WY	PRA-GRTE-13(4)	1E.8

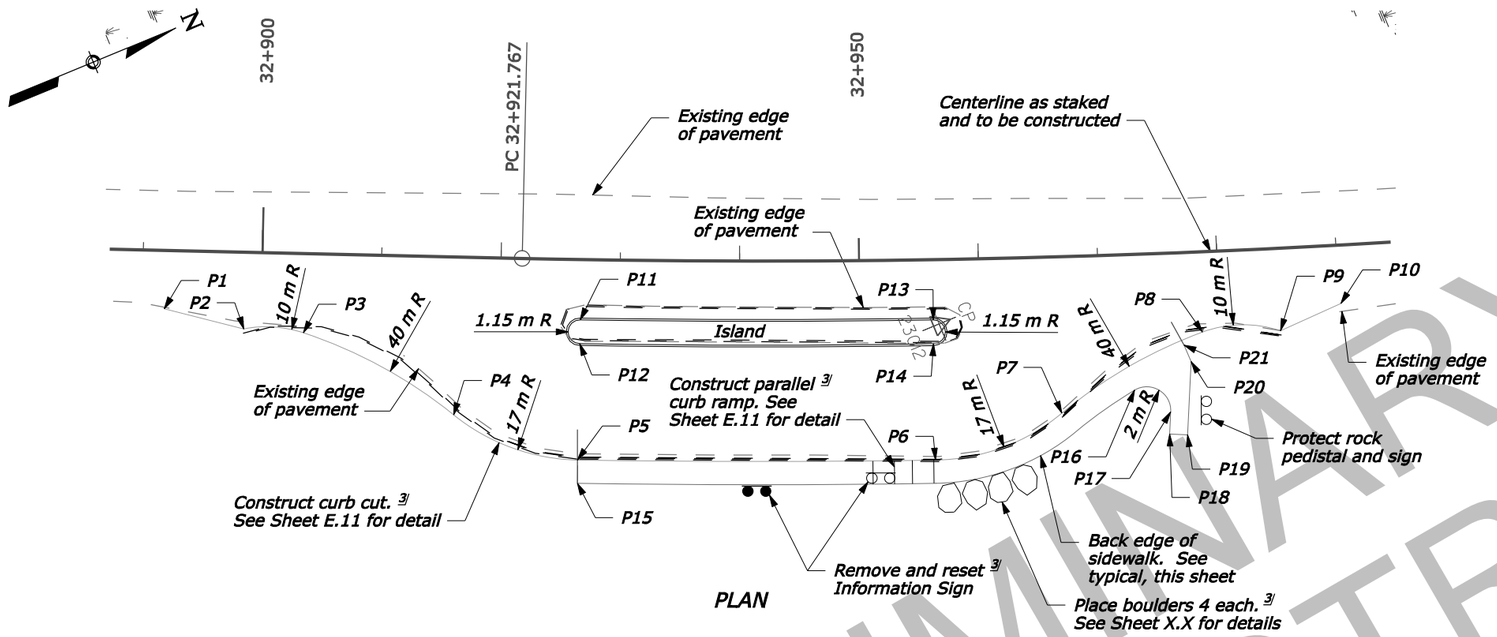

PLAN

NOTE:

1. Points P1-P14 are to the edge of pavement.
2. Points P15-P21 are to the back edge of sidewalk.
3. See Sheets 1E.11 & 1E.12 for portland cement concrete, curb and gutter, and sidewalk details.
4. See Sheet 1K.7 for pavement marking layout & sign locations.
5. Dimensions without units are meters.

FOOTNOTE:

1/ Superelevate roadway on curves at the rate "e" as indicated in the curve data shown on the plan and profile and in the Staking Report Data Listing (see FAR Clause 52.236.4).

2/ Construct slopes as shown in the Staking Report Data Listing.

3/ Verify final location with the C.O.

4/ Place conserved topsoil, mulching, and seeding as shown on Sheet 1C.2.

LAYOUT INFORMATION

POINT	LOCATION	NOTE	POINT	LOCATION	NOTE	POINT	LOCATION	NOTE	POINT	LOCATION	NOTE
P1	Sta.= 32+891.877 Offset= 4.900	Begin widening for turnout	P6	Sta.= 32+956.152 Offset= 16.800	Begin radius	P11	Sta.= 32+926.717 Offset= 4.900	Begin radius	P16	Sta.= 32+972.722 Offset= 11.370	Begin radius
P2	Sta.= 32+898.568 Offset= 6.434	Begin radius	P7	Sta.= 32+966.649 Offset= 13.109	Begin radius	P12	Sta.= 32+926.718 Offset= 7.200	End radius	P17	Sta.= 32+975.634 Offset= 13.297	End radius
P3	Sta.= 32+903.584 Offset= 6.652	Begin radius	P8	Sta.= 32+978.536 Offset= 6.729	Begin radius	P13	Sta.= 32+956.147 Offset= 4.900	Begin radius	P18	Sta.= 32+975.473 Offset= 15.155	End sidewalk
P4	Sta.= 32+916.325 Offset= 13.241	Begin radius	P9	Sta.= 32+985.027 Offset= 6.904	End radius	P14	Sta.= 32+956.146 Offset= 7.200	End radius	P19	Sta.= 32+976.943 Offset= 15.273	End sidewalk
P5	Sta.= 32+926.720 Offset= 16.800	End radius	P10	Sta.= 32+990.156 Offset= 4.900	End widening for turnout	P15	Sta.= 32+926.714 Offset= 18.750	Begin sidewalk	P20	Sta.= 32+977.485 Offset= 9.160	Back of sidewalk angle point
									P21	Sta.= 32+976.965 Offset= 7.755	End sidewalk

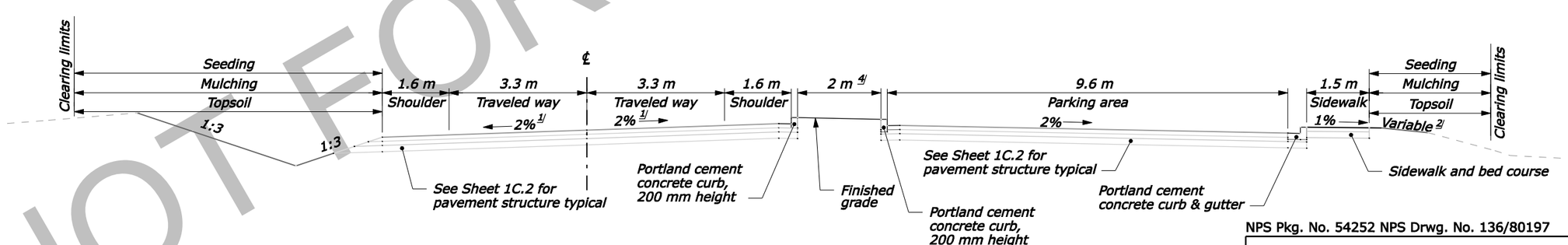

TYPICAL SECTION A-A

NO SCALE

NPS Pkg. No. 54252 NPS Drwg. No. 136/80197

TURNOUT DETAILS 32+981.78
JDR MEM. PARKWAY ENT.
NORTH PARK ROAD

PRELIMINARY
NOT FOR CONSTRUCTION

C:\Wyfiles\PW_Production\LLTuttle\dms01587\grte1304rg.dgn
Designed by: _DATE_" + "_FILE_
Checked by: --/----
--/----

STATE	PROJECT	SHEET NUMBER
WY	PRA-GRTE 13(4)	1G.7

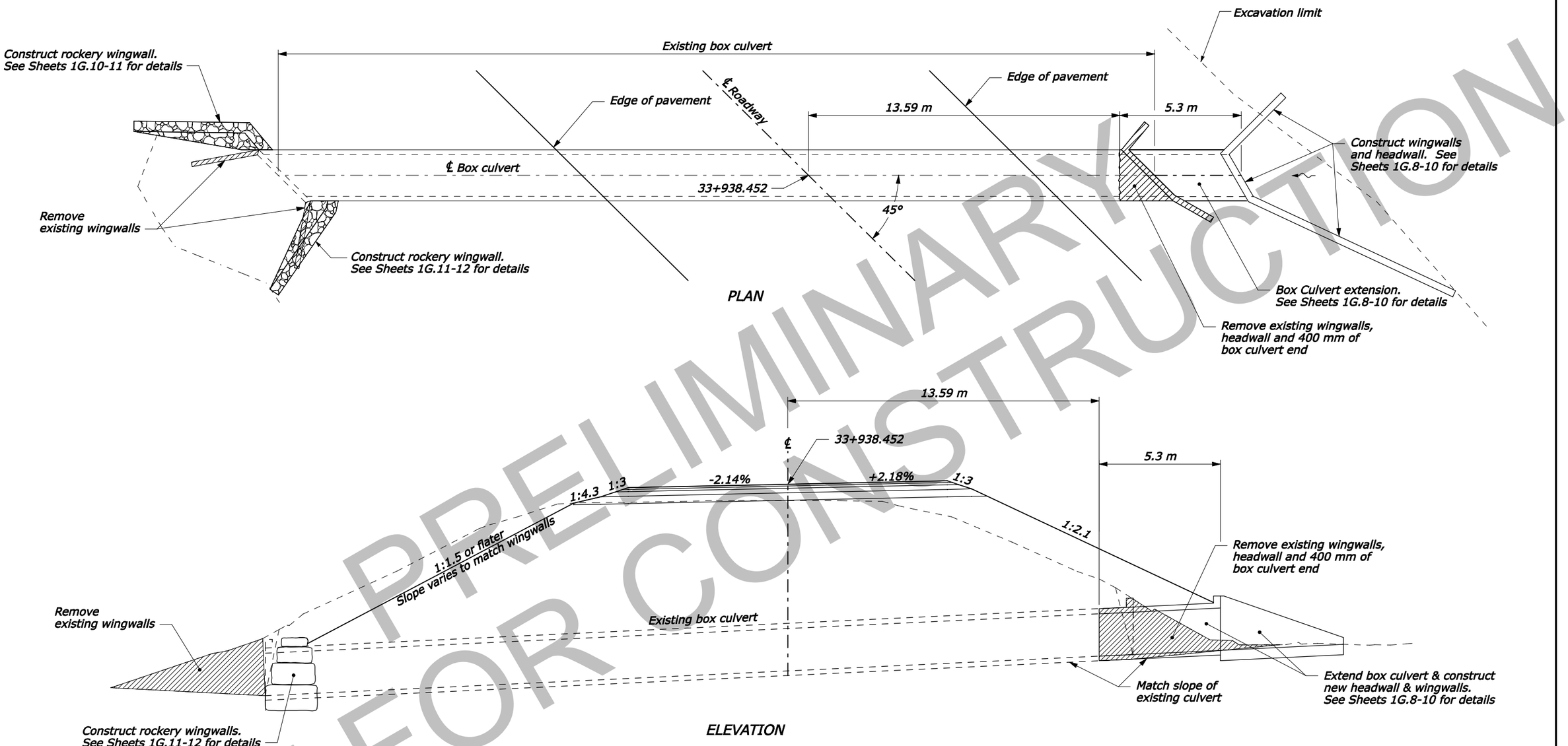

PRELIMINARY
NOT FOR CONSTRUCTION

NPS Pkg. No. 54252 NPS Drwg. No. 136/80197

NO SCALE

BOX CULVERT ALTERATION

IP_PWP:dms01592\grte13044sg.dgn [Metric_2D] 26-OCT-2007 10:35AM Designed by: Checked by: --/---- --/----

STATE	PROJECT	SHEET NUMBER
WY	PRA-GRTE 13(4)	1G.8

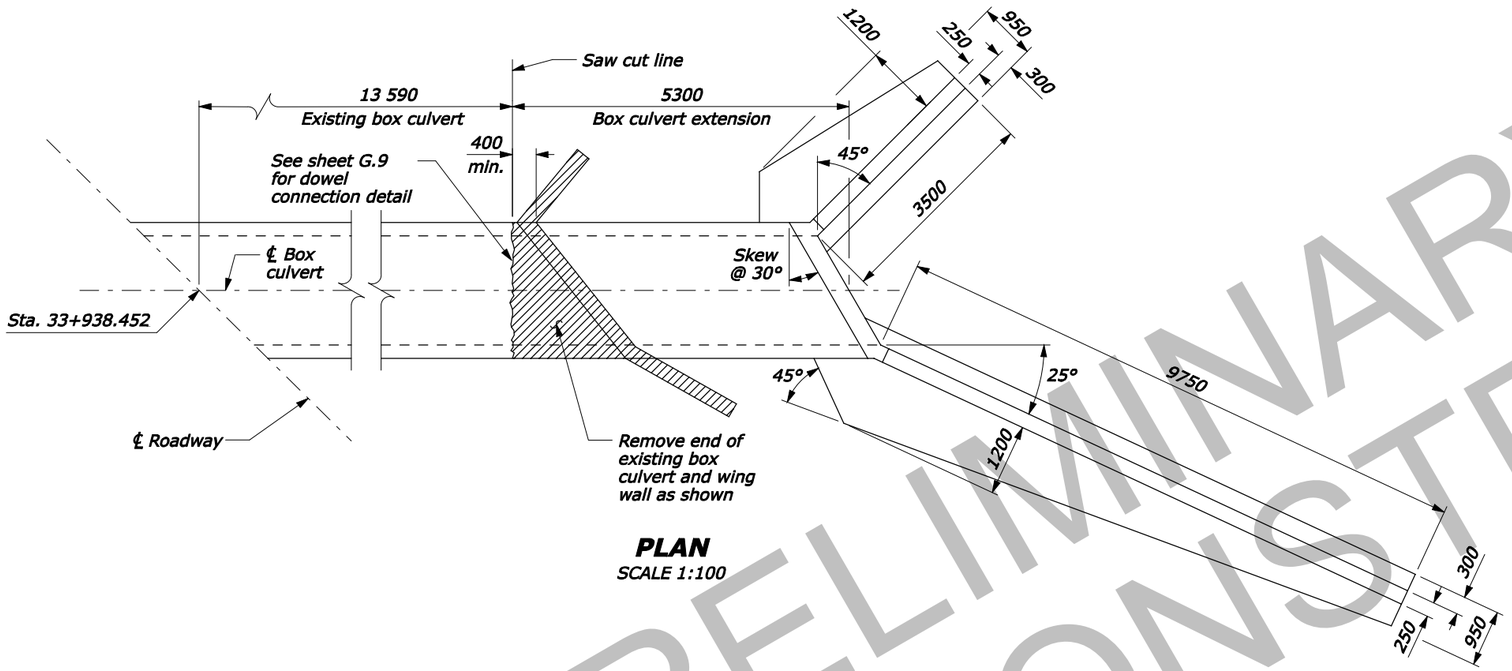

PLAN
SCALE 1:100

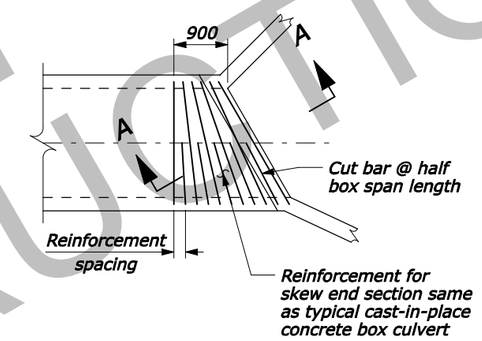

PARTIAL PLAN VIEW
AT END BOX SECTION
SCALE 1:100

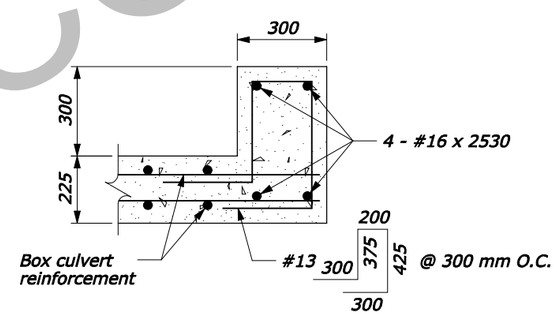

SECTION A-A
SCALE 1:20

APPROXIMATE QUANTITIES:

FOR INFORMATION ONLY
Structural Concrete Class A(AE).....23 m3
Reinforcing Steel.....1630 kg

ESTIMATED QUANTITIES (FOR INFORMATION ONLY)	
Reinforcing steel	1400 kg
Concrete	21.5 m³

GENERAL NOTES:

SPECIFICATION:
AASHTO Standard Specifications for Highway Bridges, Sixteenth Edition, 1996 as amended by the 1998 interim revisions: Standard Specifications for Construction of Roads and Bridges on Federal Highway Projects, FP-96.

DESIGN LOADS:
Live Loads: MS 18 (HS20-44)
Dead Loads: Concrete = 23.6 kN/m3

MATERIALS:
Reinforced Concrete: All reinforced cast-in-place concrete shall be air entrained with a 28 day minimum compressive strength. F'c=25 MPa. An approved air-entraining admixture shall be used in all concrete. No additives containing calcium chloride shall be used in concrete. All exposed surfaces shall be given a Class 1 ordinary surface finish. Chamfer all exposed edges and fillet all reentrant corners 20 mm, unless otherwise noted on plans.

Reinforcing Steel: Reinforcing steel shall conform to AASHTO M31M, M42M, or M53M, grade 420 deformed. Concrete cover to be 50 mm, unless otherwise noted on plans. All reinforcing steel shall be epoxy-coated.

NOTE:

1. Dimensions are in millimeters unless otherwise noted. Elevation call-outs, contour elevations, and stationing shown in meters.

NPS Pkg. No. 54252 NPS Drwg. No. 136/80197

BOX CULVERT EXTENSION DETAILS SHEET 1 OF 3

PRELIMINARY
NOT FOR CONSTRUCTION

--/---- Checked by: --/---- Designed by: 26-OCT-2007 10:35AM IP_PWP:dms01592\grte1304eg.dgn [Metric_2D]

STATE	PROJECT	SHEET NUMBER
WY	PRA-GRTE 13(4)	1I.1

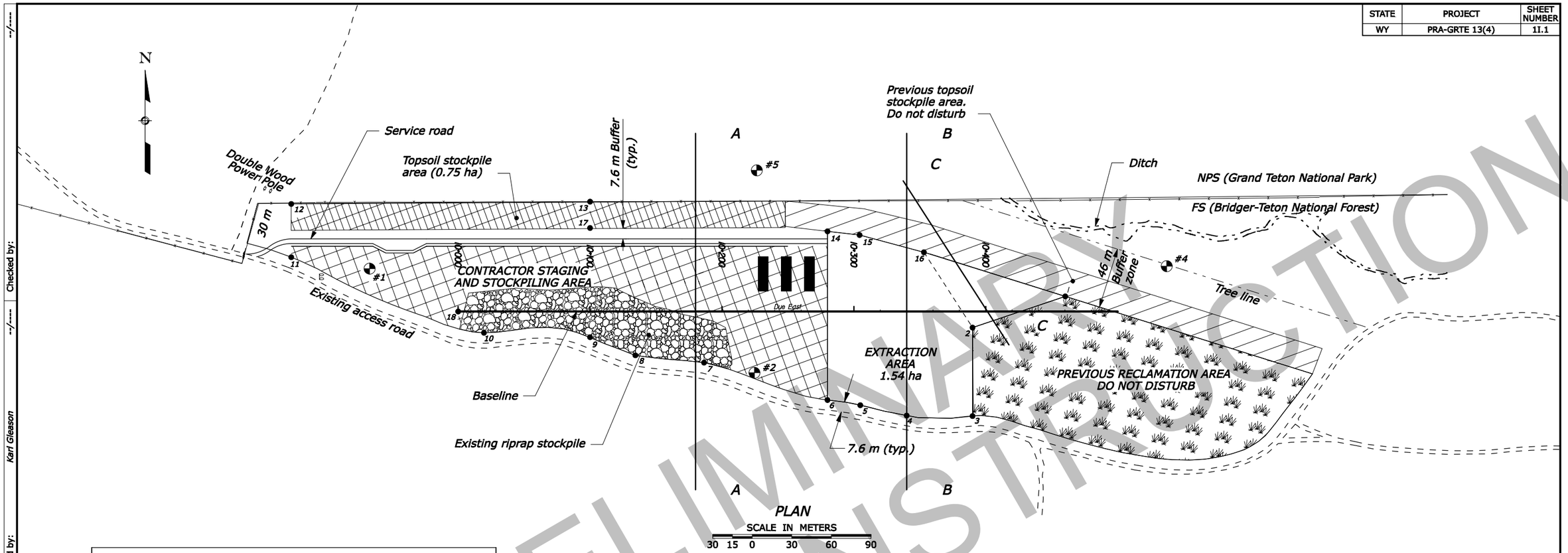

QUANTITIES

ITEM NO.	DESCRIPTION	QUANTITY
15702	Temporary turf establishment (hydraulic)	0.75 ha
62405	Placing conserved topsoil, 50 mm depth	1.54 ha
62501	Seeding, hydraulic method	1.54 ha
62504A	Mulching. hydraulic method	1.54 ha

COORDINATES OF MONITOR WELLS

WELL #1	N 345,600.050	E117,995.878	Z 2127.854
WELL #2	N 345,520.824	E 118,288.045	Z 2134.411
WELL #3	Monitoring well #3 does not exist		
WELL #4	N 345,601.567	E 118,600.488	Z 2140.167
WELL #5	N 345,674.202	E 118,289.719	Z 2133.083

COORDINATES OF MATERIAL SOURCE AND STAGING/STOCKPILING AREA LIMITS

1.	N= 345578.705 E= 118523.593	10.	N= 345551.076 E= 118082.906
2.	N= 345555.040 E= 118453.260	11.	N= 345608.373 E= 117936.831
3.	N= 345487.990 E= 118453.260	12.	N= 345648.716 E= 117936.831
4.	N= 345488.373 E= 118403.341	13.	N= 345650.488 E= 118163.341
5.	N= 345496.238 E= 118368.224	14.	N= 345627.968 E= 118343.341
6.	N= 345500.158 E= 118343.341	15.	N= 345625.178 E= 118367.645
7.	N= 345528.499 E= 118249.738	16.	N= 345612.093 E= 118416.421
8.	N= 345534.014 E= 118197.739	17.	N= 345630.488 E= 118163.341
9.	N= 345547.770 E= 118163.341	18.	N= 345567.218 E= 118063.341

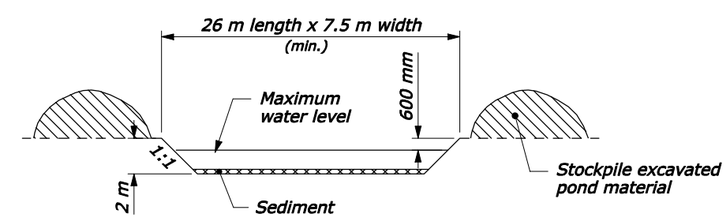

SETTLING POND

NO SCALE

NOTE:

1. See Geotechnical Report No. 27-97 for additional information.

LEGEND:

- MONITOR WELL
- COORDINATE POINT
- SETTLING POND

NPS Pkg. No. 54252 NPS Drwg. No. 136/80197

SPREAD CREEK PIT OPERATION PLAN

SHEET 1 OF 2

PRELIMINARY NOT FOR CONSTRUCTION

--/---- Checked by: --/---- Karl Gleason Designed by: 26-OCT-2007 10:36AM IP_PWP:dms01594\gr1301ma.dgn [Default]

STATE	PROJECT	SHEET NUMBER
WY	PRA-GRTE 13(4)	1I.2

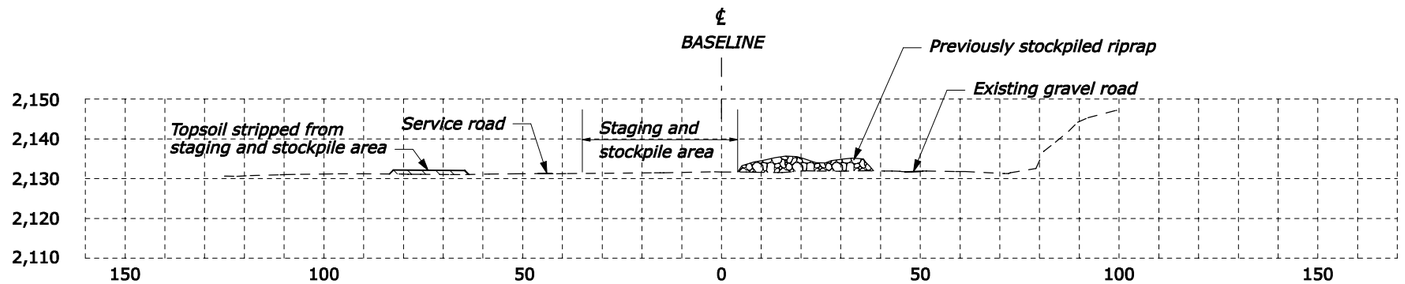

SECTION A-A
10+180

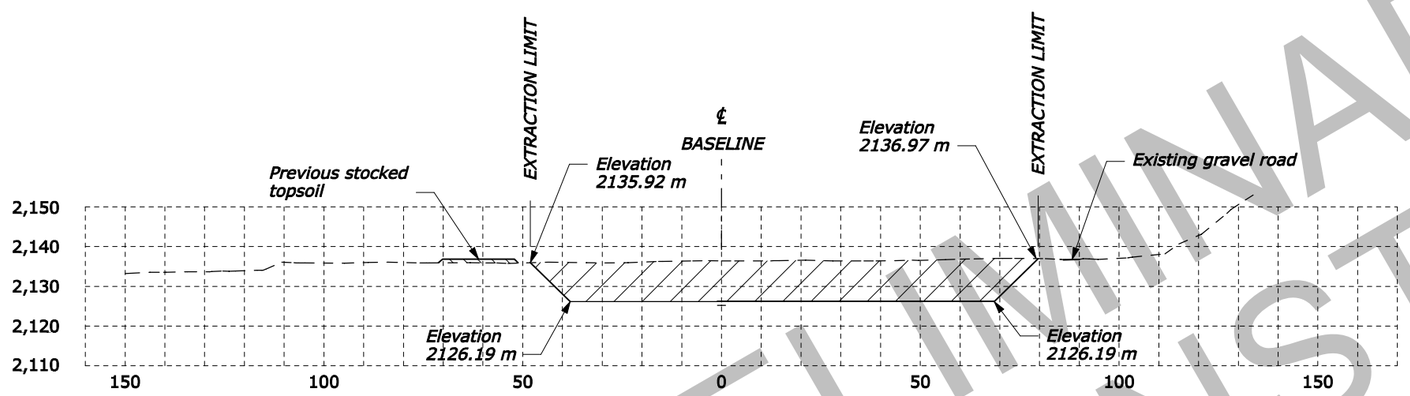

SECTION B - B
10+340

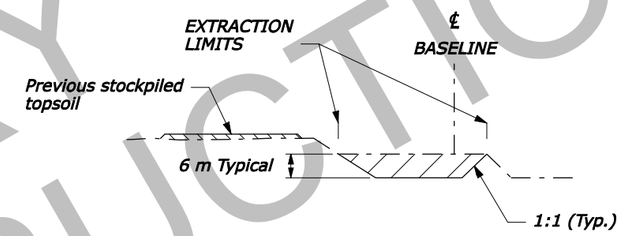

SECTION C - C
APPROXIMATED

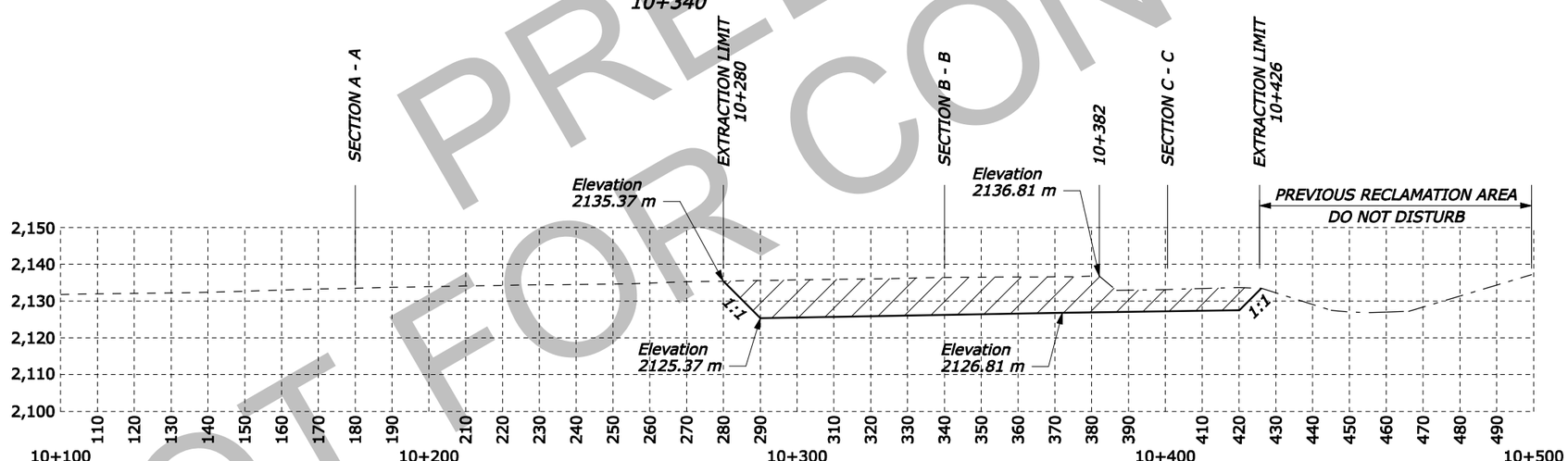

PROFILE - BASELINE

NPS Pkg. No. 54252 NPS Drwg. No. 136/80197

LEGEND:

- EXTRACTION AREA
- TOPSOIL STOCKPILE AREA
- EXISTING GROUND
- APPROXIMATE EXISTING GROUND

SPREAD CREEK PIT OPERATION PLAN
SHEET 2 OF 2

PRELIMINARY NOT FOR CONSTRUCTION

--/---- Checked by: --/---- Karl Gleason Designed by: 26-OCT-2007 10:36AM IP_PWP:dms01594\gr1301ma.dgn [Default]

STATE	PROJECT	SHEET NUMBER
WY	PRA-GRTE 13(4)	1I.3

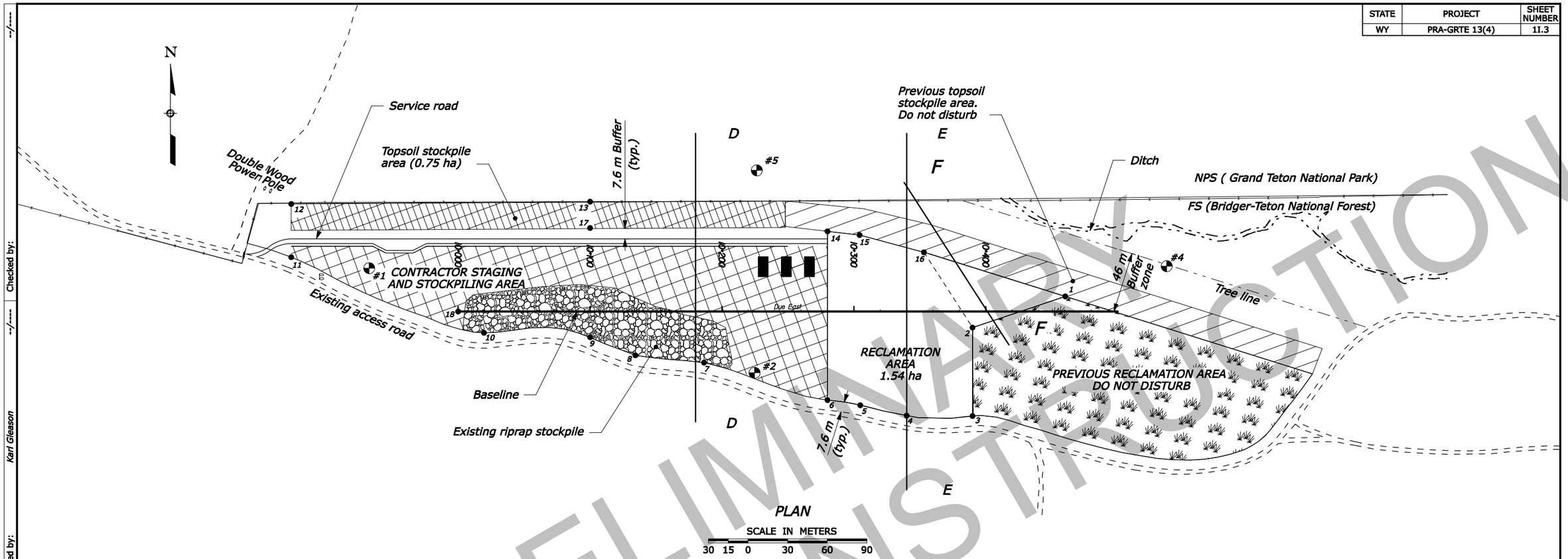

PLAN

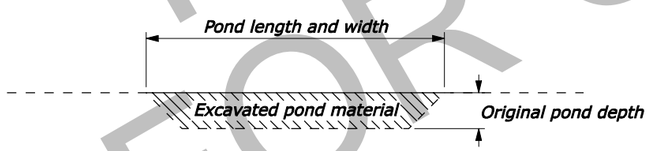

SETTLING POND RECLAMATION

NO SCALE

LEGEND:

- MONITOR WELL
- COORDINATE POINT
- SETTLING POND

NOTE:

1. See Sheet 1I.1 for coordinate data of points and wells.

NPS Pkg. No. 54252 NPS Drwg. No. 136/80197

SPREAD CREEK PIT RECLAMATION PLAN

SHEET 1 OF 2

PRELIMINARY NOT FOR CONSTRUCTION

IP_PWP:dms01594\gr1301ma.dgn [Default] 26-OCT-2007 10:36AM Designed by: Karl Gleason Checked by: --/---- --/----

STATE	PROJECT	SHEET NUMBER
WY	PRA-GRTE 13(4)	1I.4

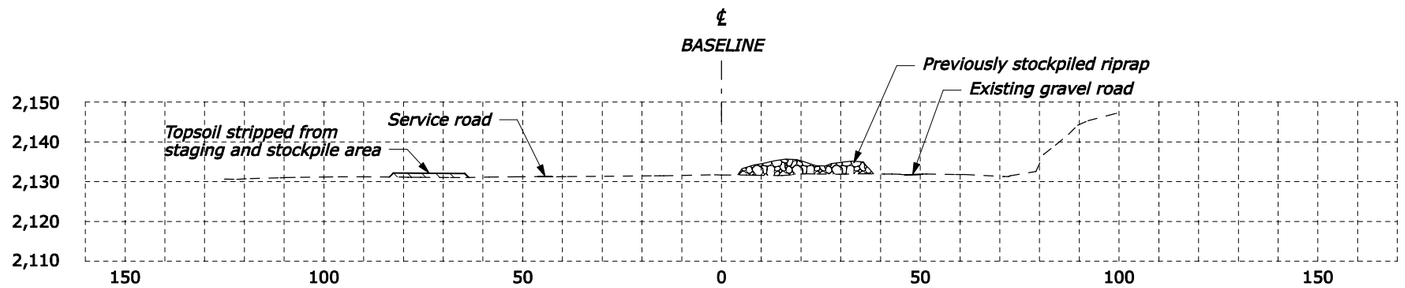

SECTION D -D
10+180

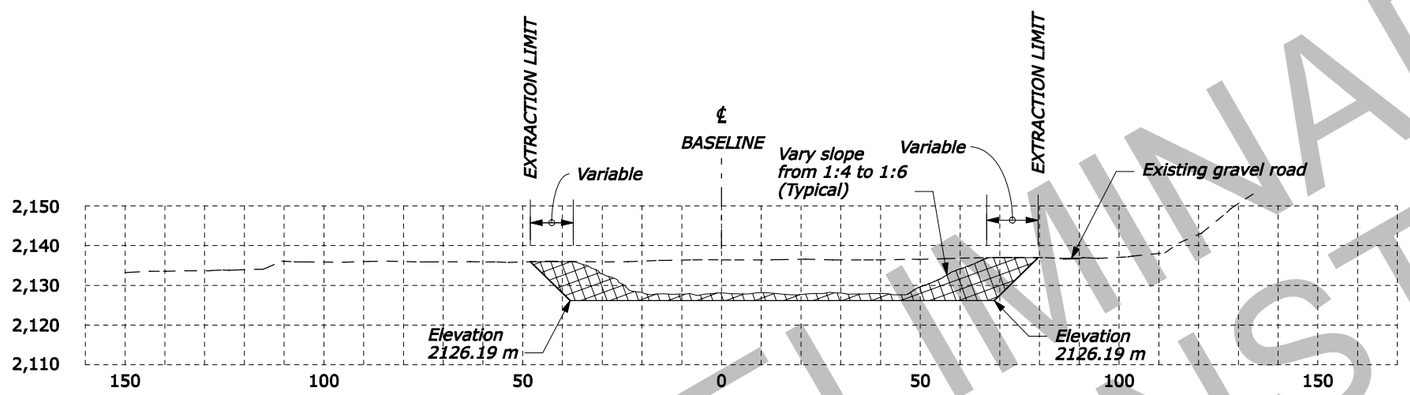

SECTION E - E
10+340

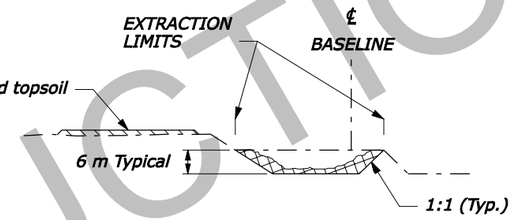

SECTION F - F
APPROXIMATED

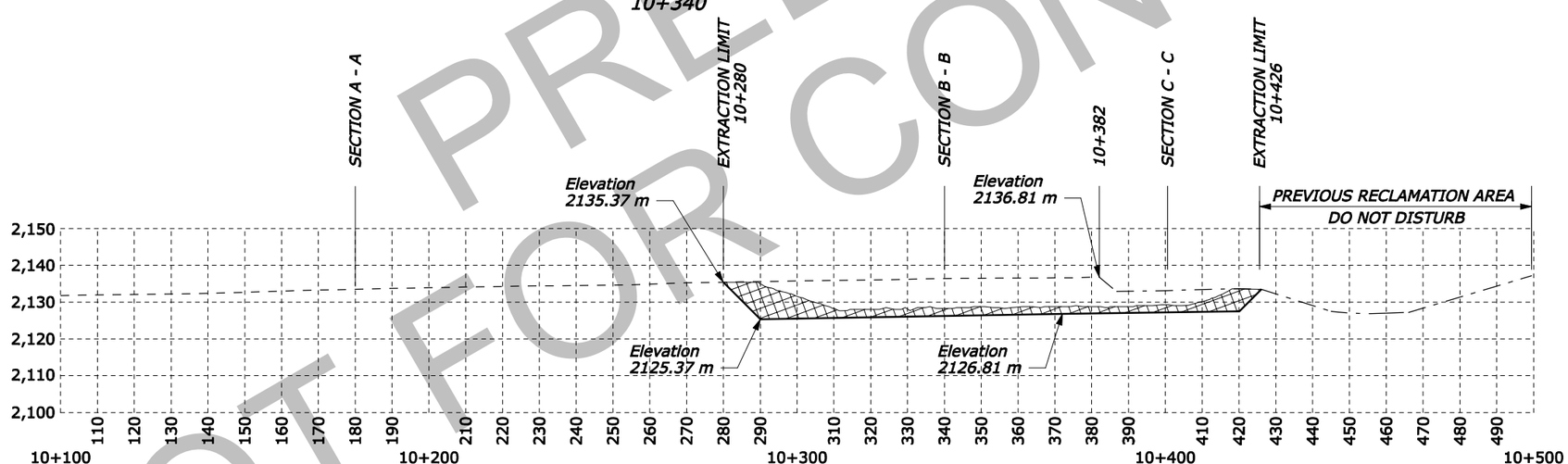

PROFILE - BASELINE

NPS Pkg. No. 54252 NPS Drwg. No. 136/80197

LEGEND:

RECLAMATION AREA
TOPSOIL STOCKPILE AREA
EXISTING GROUND
APPROXIMATE EXISTING GROUND

SPREAD CREEK PIT RECLAMATION PLAN
SHEET 2 OF 2

PRELIMINARY NOT FOR CONSTRUCTION

--/---- Checked by: --/---- Karl Gleason Designed by: 26-OCT-2007 10:36AM IP_PWP:dms01594\gr1301ma.dgn [Default]

STATE	PROJECT	SHEET NUMBER
WY	PRA-GRTE 13(4)	1I.5

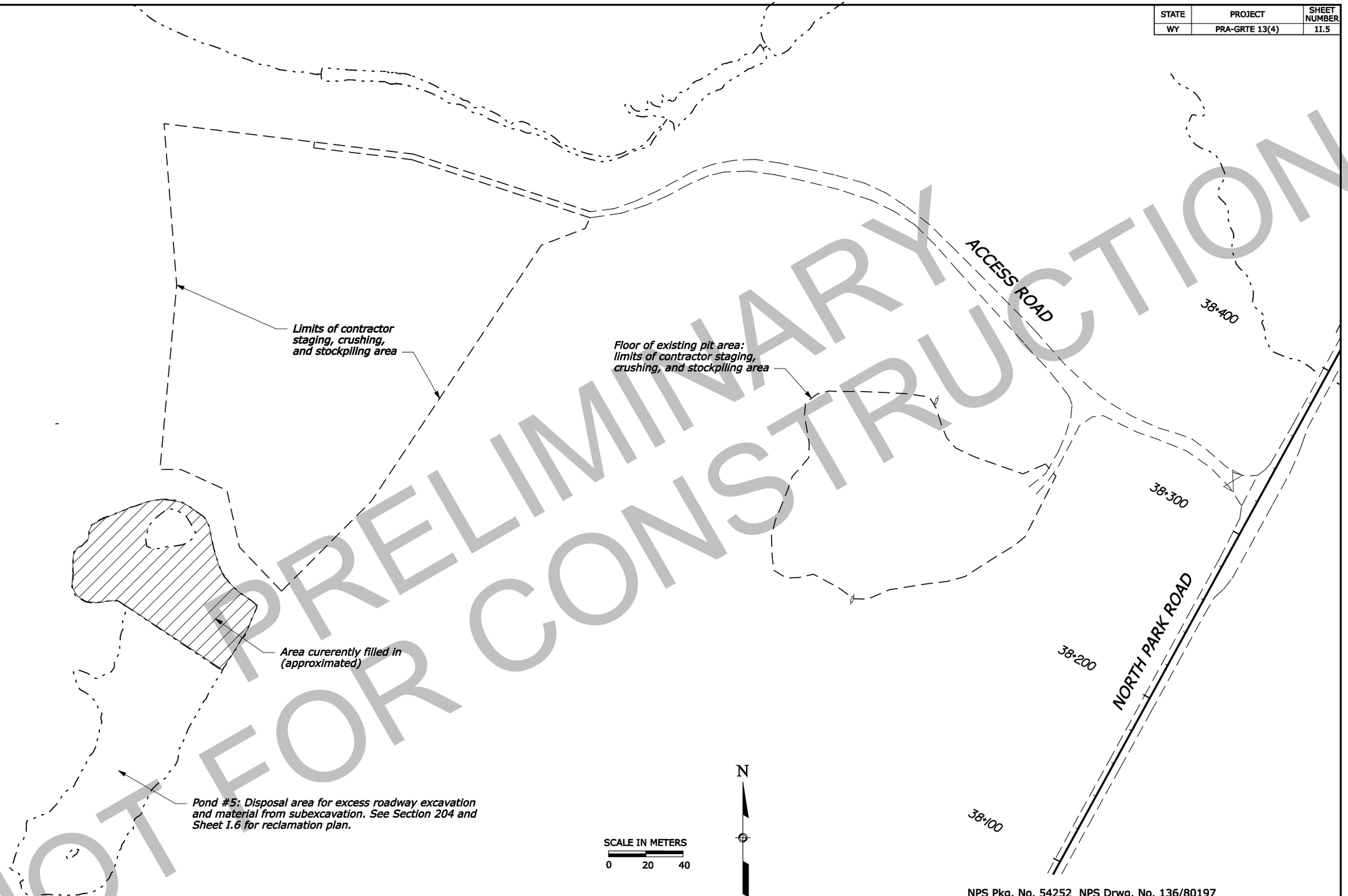

PRELIMINARY
NOT FOR CONSTRUCTION

NPS Pkg. No. 54252 NPS Drwg. No. 136/80197

NOTE:

1. *Construct setting pond(s) as necessary. See Sheet I.1 and I.3 for details.*

SNAKE RIVER PIT OPERATION PLAN

IP_PWP:dms01594\gr1301mb.dgn [Metric_2D] 26-OCT-2007 10:36AM Designed by: Karl Gleason 04/2002 Checked by: --/----

STATE	PROJECT	SHEET NUMBER
WY	PRA-GRTE 13(4)	I.6

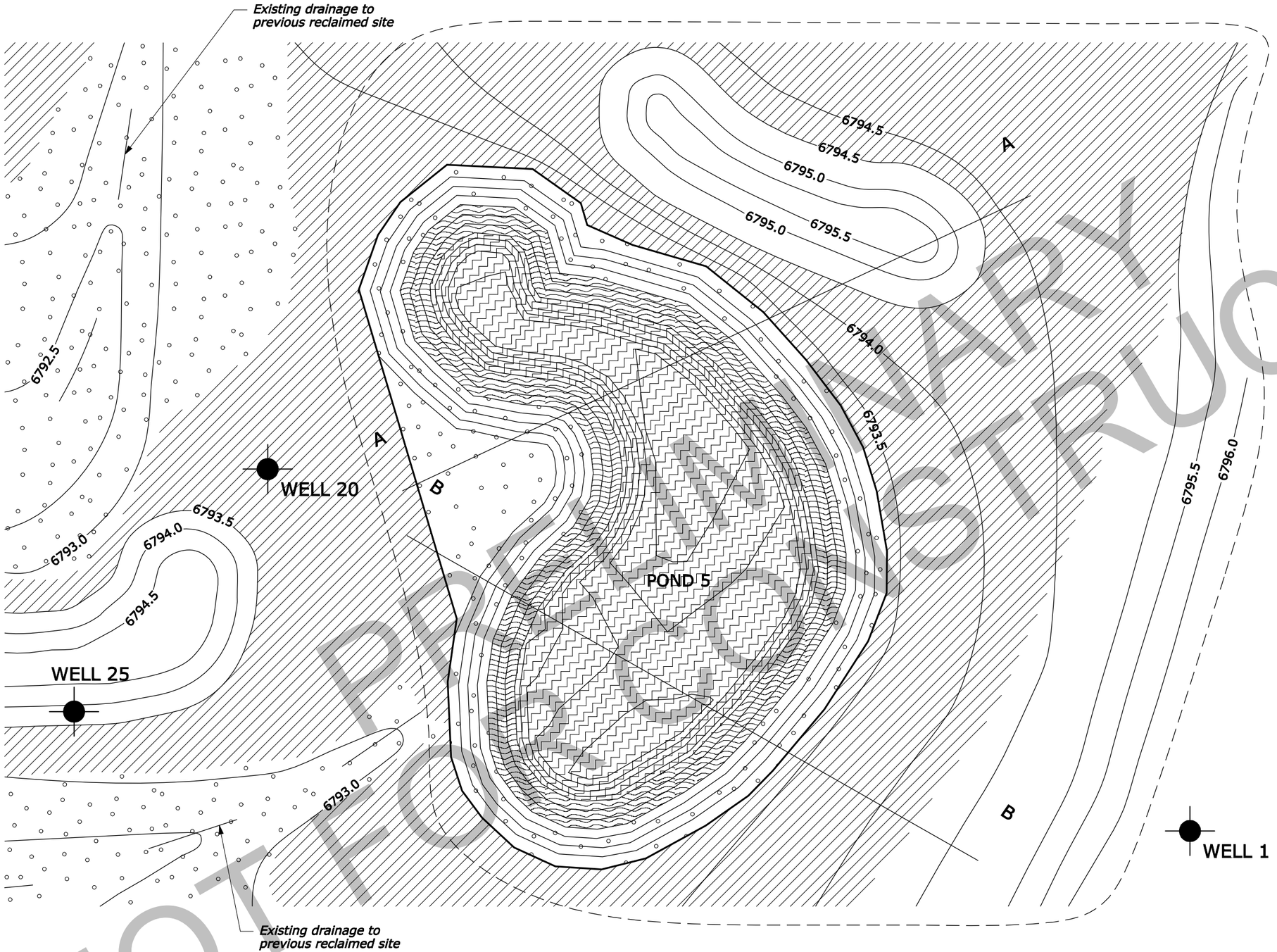

N

WETLAND MITIGATION SITE
1.4 HECTARES (3.5 ACRES)

Key:

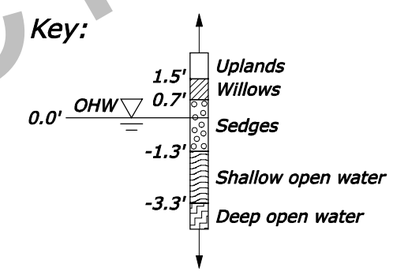

NOTE:

1. See Sheet I.7 for Section A-A and B-B.
2. Preliminary Design. Obtain final grading plan from CO prior to beginning reclamation work.

LEGEND:

- Final contour
- 6796.0 — Final contour elevation
- Groundwater monitoring well
- Drainage
- Site boundary
- Staging area boundary

PRELIMINARY NOT FOR CONSTRUCTION

NPS Pkg. No. 54252 NPS Drwg. No. 136/80197

Units are US customary.

Scale in feet
20 0 20 40 60 80

SNAKE RIVER PIT RECLAMATION PLAN
Sheet 1 of 2

IP_PWP:dms01594\gr1301mc.dgn [US_Sur2D] 26-OCT-2007 10:37AM Designed by: --/---- Checked by: --/----

STATE	PROJECT	SHEET NUMBER
WY	PRA-GRTE 13(4)	1I.7

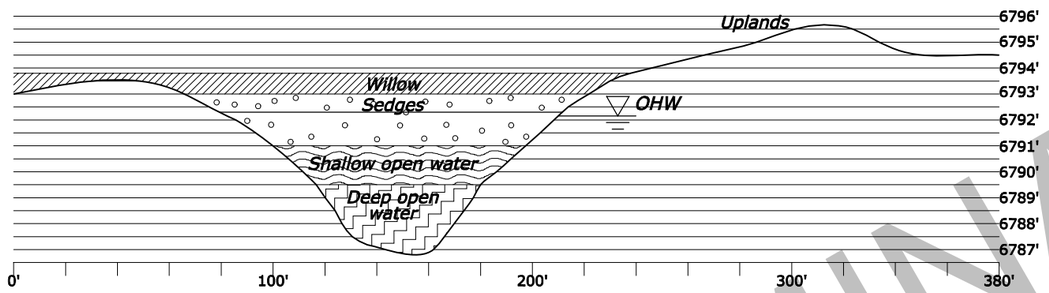

SECTION A-A

Scale: H: 60:1 V: 6:1

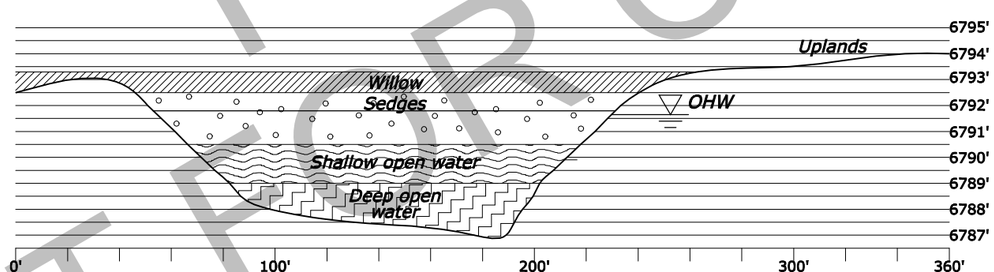

SECTION B-B

Scale: H: 60:1 V: 6:1

PRELIMINARY
NOT FOR CONSTRUCTION

NOTE:

1. *Preliminary Design. Obtain final grading plan from CO prior to beginning reclamation work.*

NPS Pkg. No. 54252 NPS Drwg. No. 136/80197

Units are US customary.

SNAKE RIVER PIT RECLAMATION PLAN

Sheet 2 of 2

--/---- Checked by: --/---- Designed by: 26-OCT-2007 10:37AM 1P_PWP:dms01594\gr1301mc.dgn [US_Sur2D]

STATE	PROJECT	SHEET NUMBER
WY	PRA-GRTE 13(4)	1L.1

UTILITY QUANTITIES			
ITEM NUMBER	DESCRIPTION	UNIT	TOTALS
63601-3000	System installation, electrical, coordination	lpsm	lpsm
63601-3000	System installation, electrical	lpsm	lpsm
63622-0000	Utility trench	m	5,250.0

INFORMATION ONLY		
DESCRIPTION	QUANTITY	UNIT
Removal of concrete utility pad	12	each
Removal of electrical facility	17	each
Concrete utility pad 1/	22	each
Vaults (UM22A)	22	each
25kV elbow, load break	132	each
25kV, 3-place module	66	each
Cap (VUM6-11)	66	each
Trench excavation	2,650	m3
Primary conductor, #1/0 Str Al 25kV jacketed	18,900	m
Electric warning tape	5,250	m

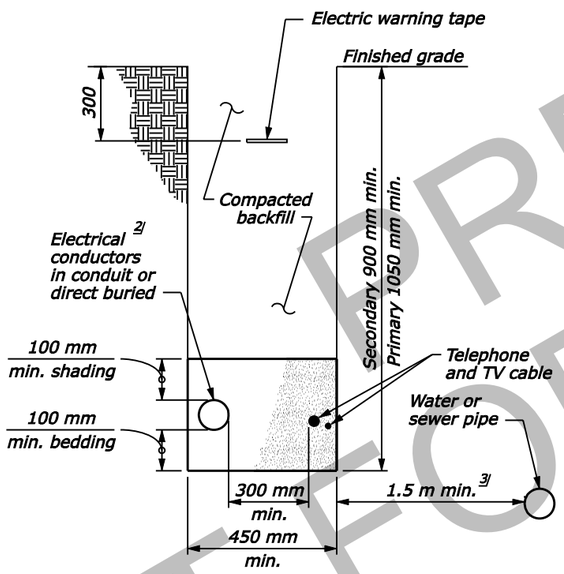

UTILITY TRENCH DETAIL

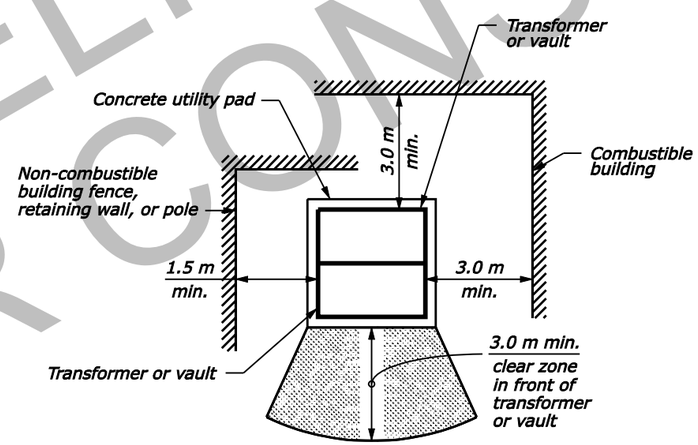

TRANSFORMER AND VAULT CLEARANCE DETAIL

NOTE:

1. Perform underground telephone and electrical work according to the approved utility relocation plan specified in Subsection 107.02.
2. Ensure that no obstructions exist above transformers or vaults.
3. Dimensions without units are millimeters.

FOOTNOTE:

1/ Provide PVC conduit for primary and secondary conductors, and stub out conduits above concrete utility pads.

2/ Whenever electrical conductors cross over or under other utilities; provide at least 300 mm of vertical seperation, and protect the conductors with at least 1.2 m of suitable PVC or rigid steel conduit that extends at least 600 mm on both sides of crossing.

3/ The minimum offset may be changed to fit field conditions whenever changes to the minimum offset are certified by the utility owner and approved by the CO.

NPS Pkg. No. 54252 Drwg. No. 136/80197

NO SCALE

UTILITY QUANTITIES AND DETAILS

PRELIMINARY
NOT FOR CONSTRUCTION

--/---- J. Aguirre Checked by: 10/31/07 C. Choy Designed by: $DATE$ $PATH$

STATE	PROJECT	SHEET NUMBER
WY	PRA GRTE 13(4)	1L.2

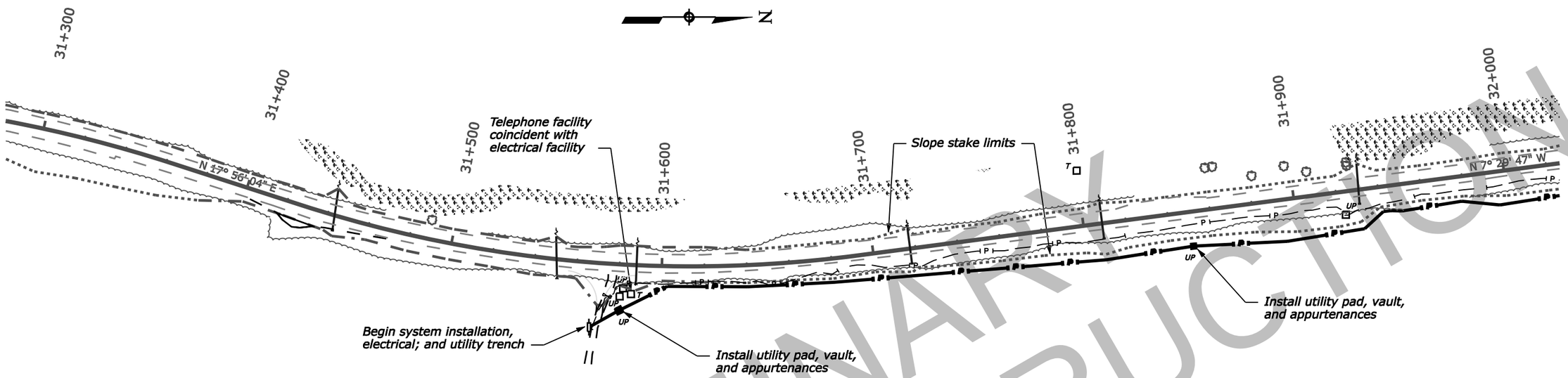

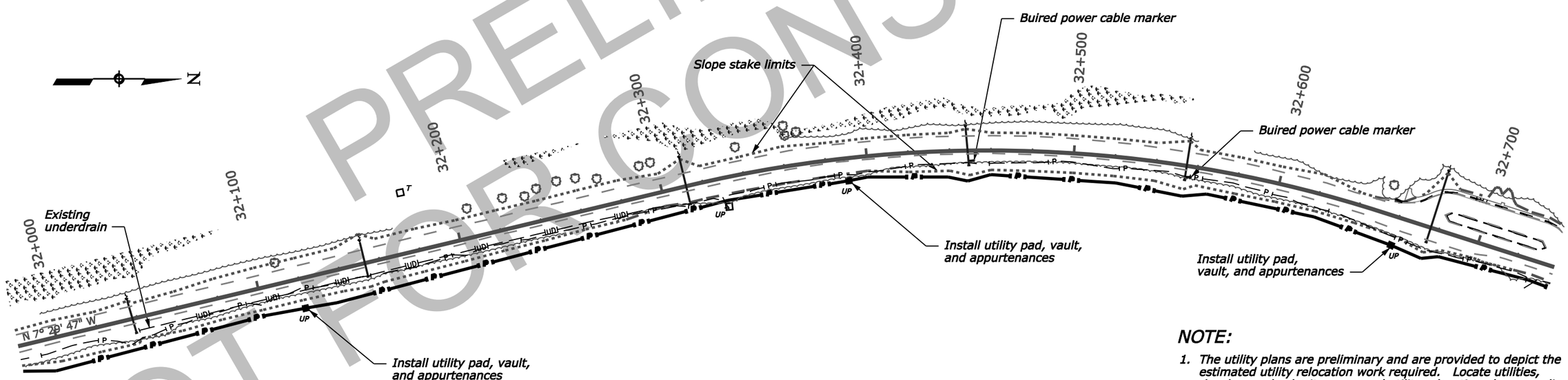

PRELIMINARY
NOT FOR CONSTRUCTION

NOTE:

1. The utility plans are preliminary and are provided to depict the estimated utility relocation work required. Locate utilities, develop, and submit a proposed utility relocation plan according to Subsection 107.02.

NPS Pkg. No. 54252 Drwg. No. 136/80197

UTILITY PLAN

--/---- | J. Aguirre | Checked by: | 10/30/07 | C. Choy | Designed by: | $DATE$ | $PATH$

STATE	PROJECT	SHEET NUMBER
WY	PRA GRTE 13(4)	1L.3

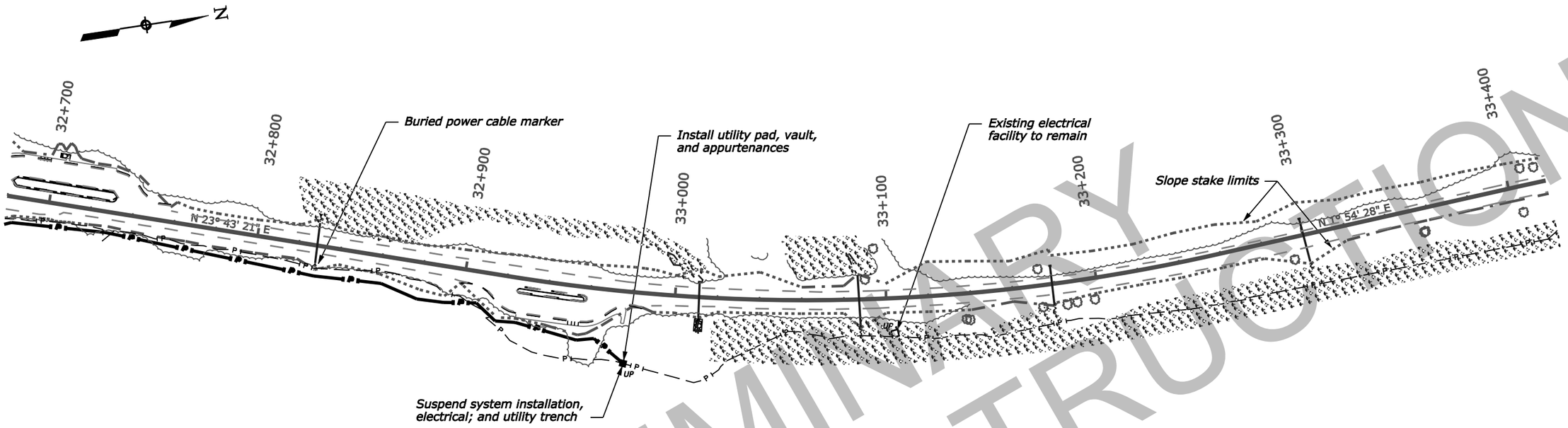

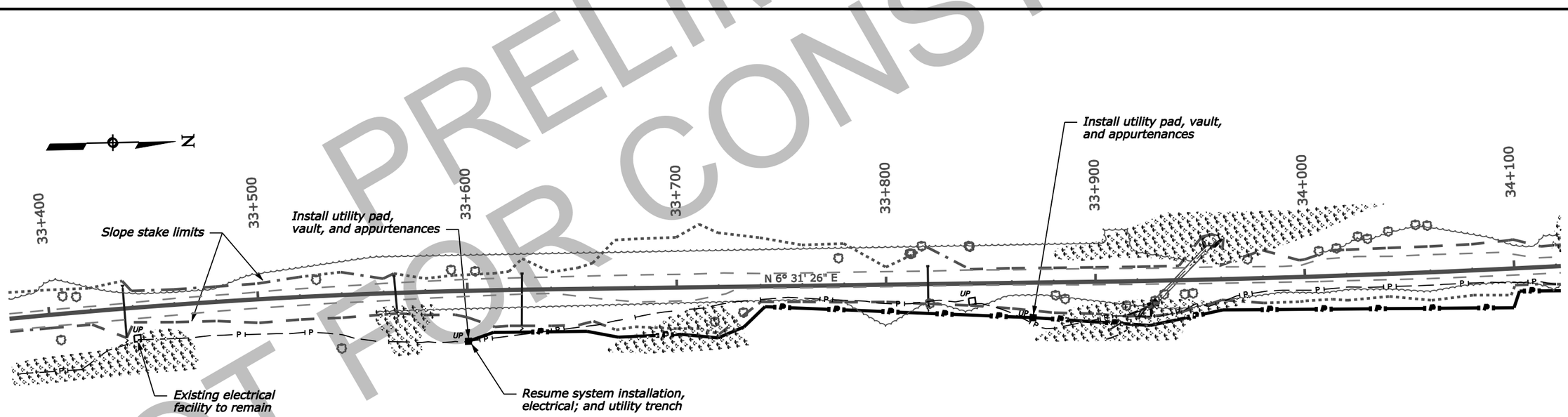

PRELIMINARY
NOT FOR CONSTRUCTION

NPS Pkg. No. 54252 Drwg. No. 136/80197

UTILITY PLAN

$PATH$ | $DATE$ | Designed by: C. Choy | Checked by: 10/30/07 | J. Aguirre | --/----

STATE	PROJECT	SHEET NUMBER
WY	PRA GRTE 13(4)	1L.4

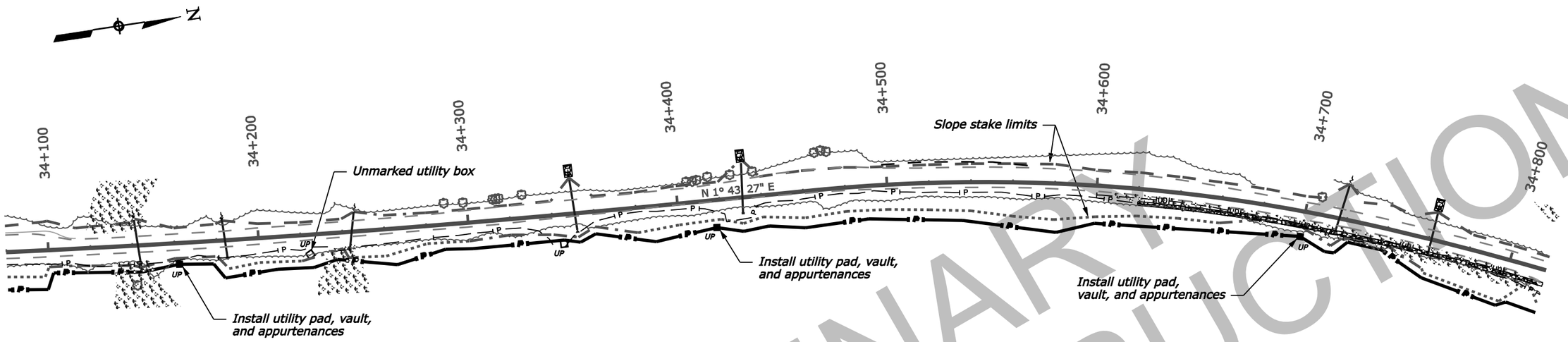

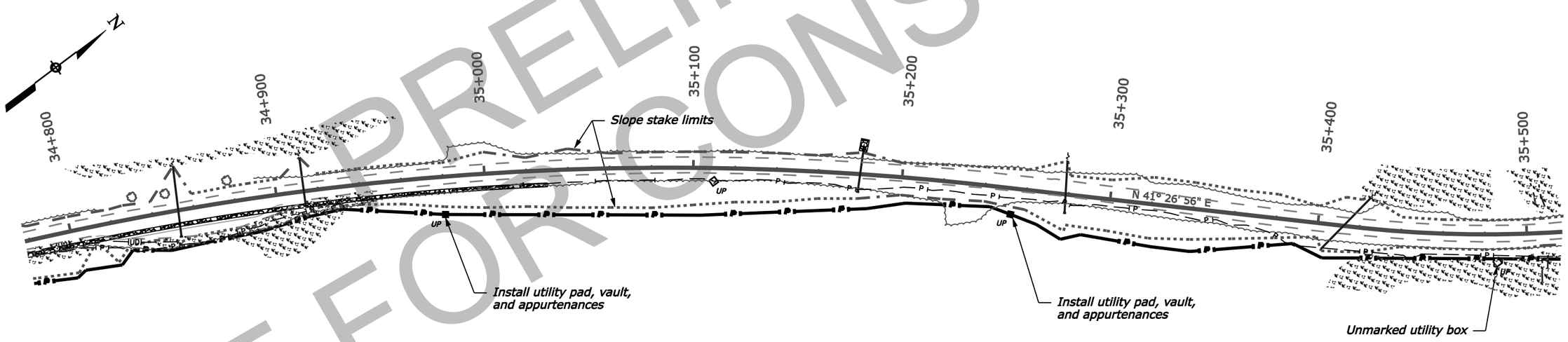

PRELIMINARY
NOT FOR CONSTRUCTION

NPS Pkg. No. 54252 Drwg. No. 136/80197

UTILITY PLAN

$PATH$ | $DATE$ | Designed by: C. Choy | Checked by: 10/30/07 | J. Aguirre | --/----

STATE	PROJECT	SHEET NUMBER
WY	PRA GRTE 13(4)	1L.5

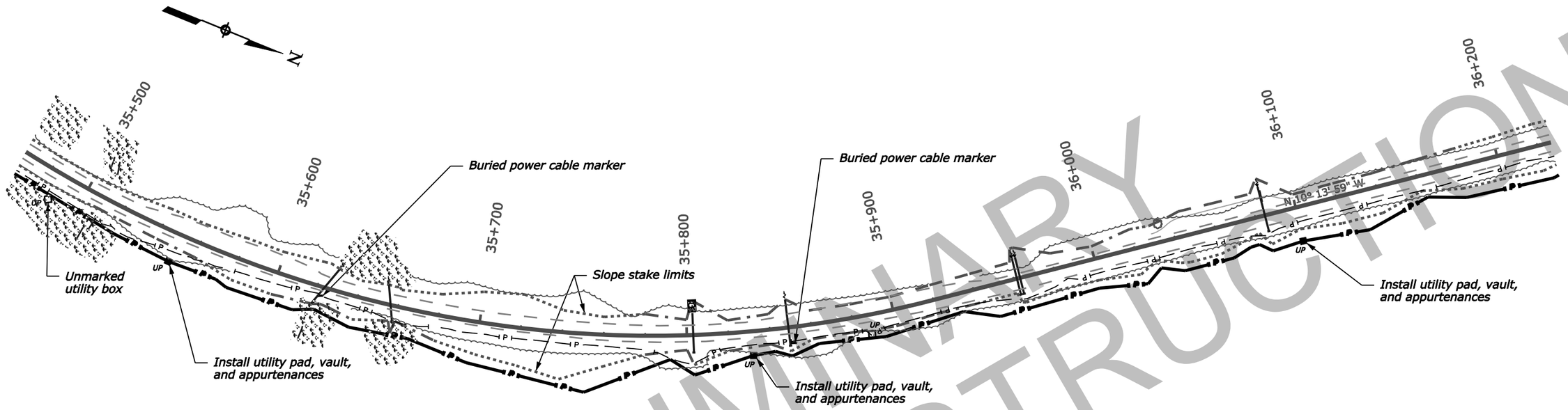

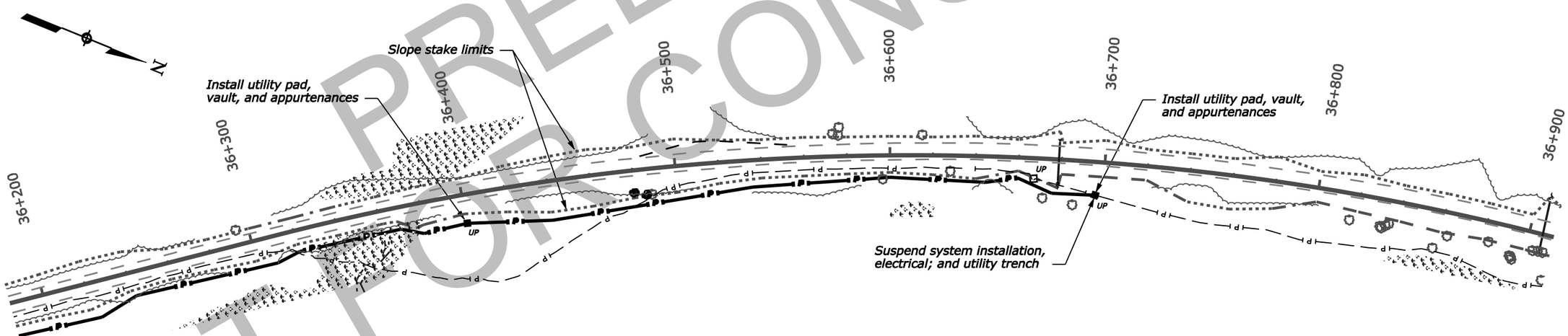

NPS Pkg. No. 54252 Drwg. No. 136/80197

UTILITY PLAN

PRELIMINARY
NOT FOR CONSTRUCTION

$PATH$ | Designed by: $DATE$ | Checked by: 10/30/07 | C. Choy | J. Aguirre | --/----

STATE	PROJECT	SHEET NUMBER
WY	PRA GRTE 13(4)	1L.6

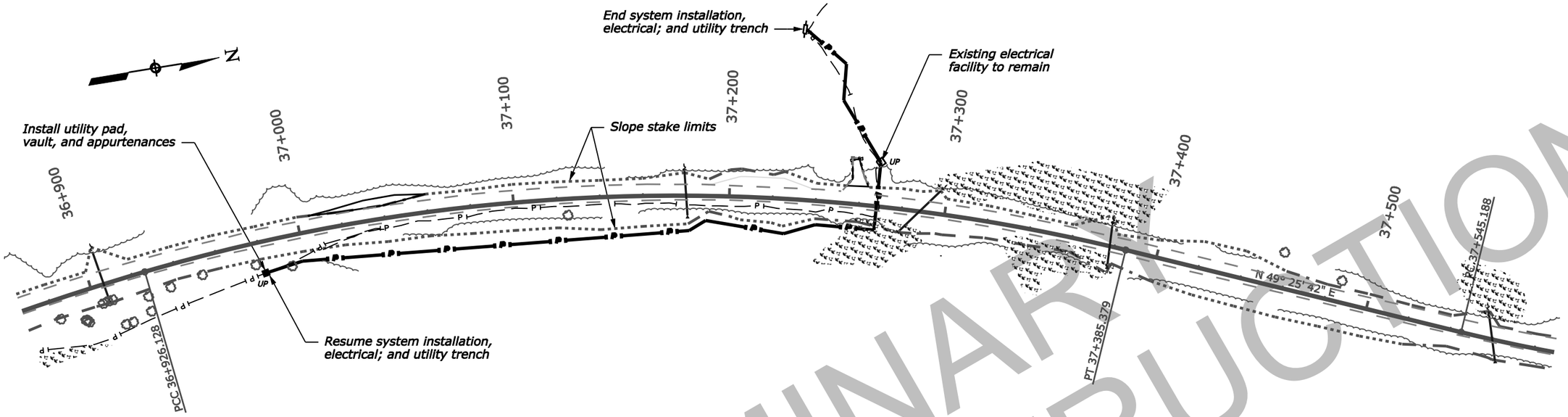

PRELIMINARY
NOT FOR CONSTRUCTION

NPS Pkg. No. 54252 Drwg. No. 136/80197

UTILITY PLAN

$PATH$ | $DATE$ | Designed by: | C. Choy | 10/30/07 | Checked by: | J. Aguirre | --/----