Comments to D. Hildebrand on 6-25-97. —MCB

STATE	PROJECT	SHEET NUMBER
WA	WA 158-1(1)	

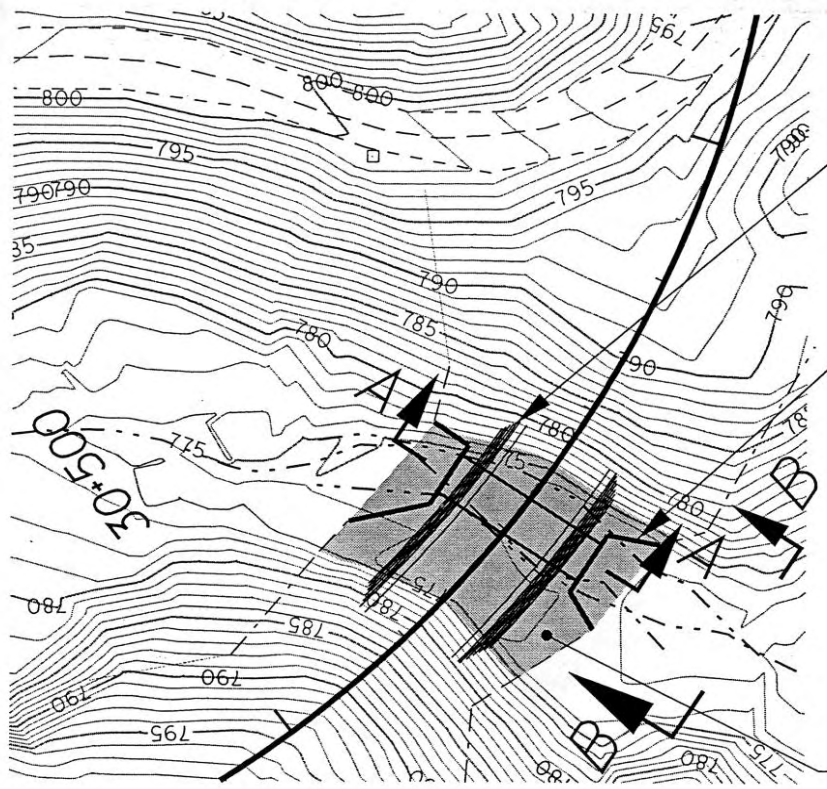

Construction within the ordinary high water is 840 square meters.

Construct Mechincally Stablized Earthen (MSE) Wall

Construct Vertical Concrete Headwall and Wingwalls at inlet and outlet.

Q50 = 5.75 cms

1m ≡ D.H

Existing Ground

WINCHESTER CREEK
STA 30+540

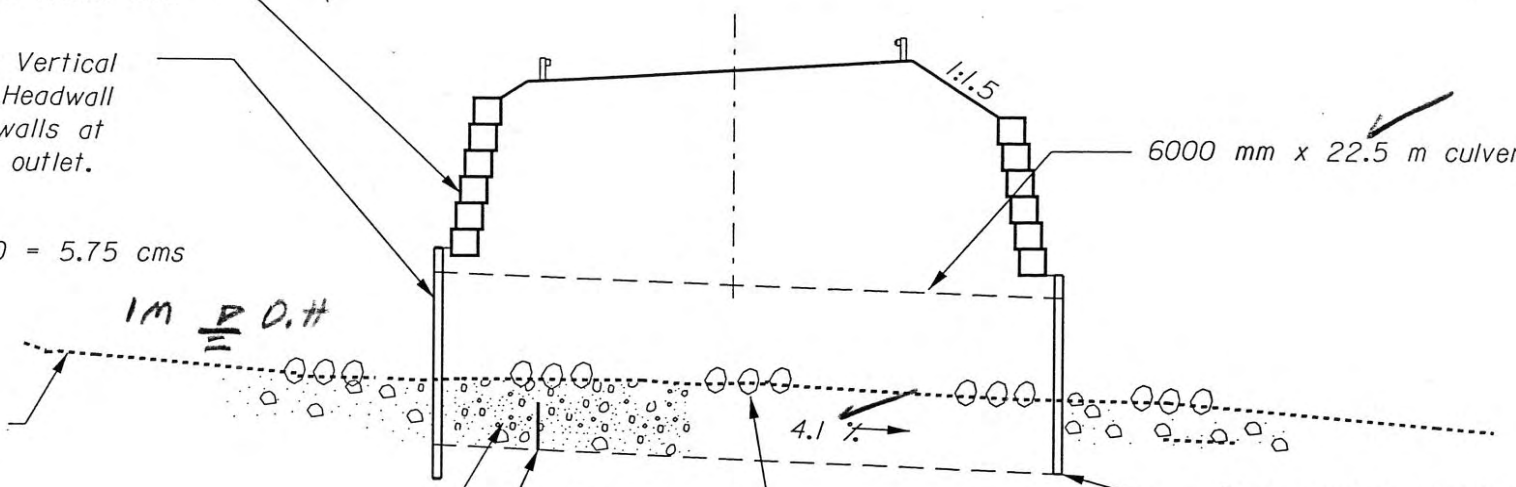

SECTION A-A

Place conserved streambed material, at existing stream grade throughout the culvert.

Place baffles on 1.5 m c-c spacing

Install 5 - Diamond patterned rocks at 5 m intervals. Install rocks in the diamond pattern with a 1 m space between rocks. Embed rocks 300 mm into the streambed.

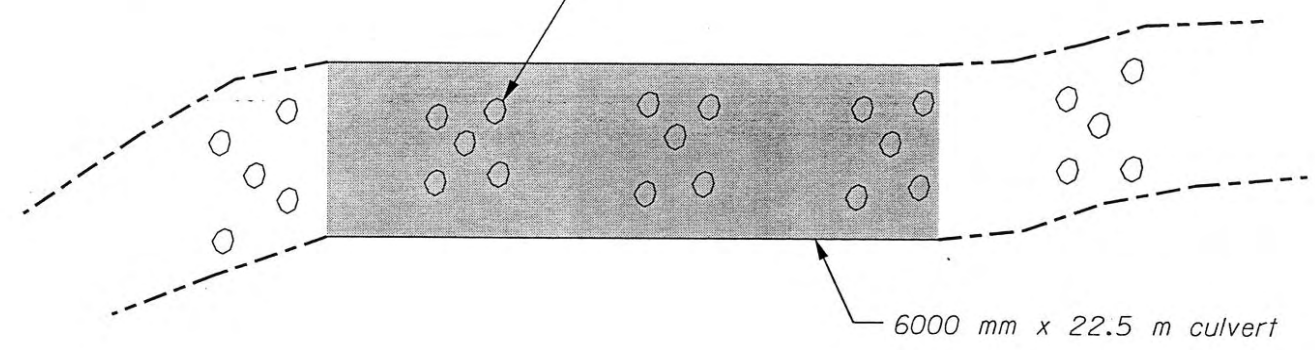

4.57 m Channel

Construct mammalian path with tightly compacted Class 3 riprap. Fill voids with granular material

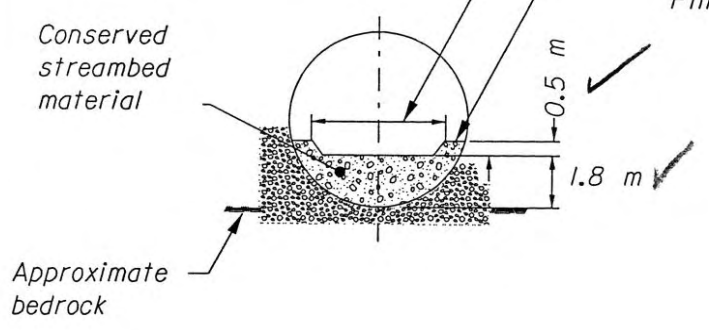

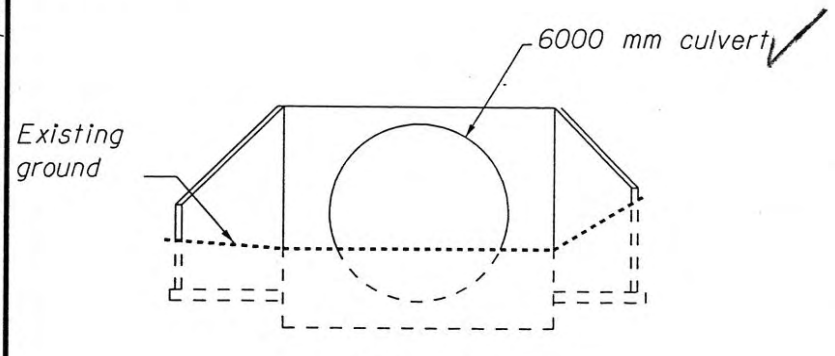

SECTION B-B

VERTICAL CONCRETE HEADWALL AND WINGWALLS INLET/OUTLET END VIEW

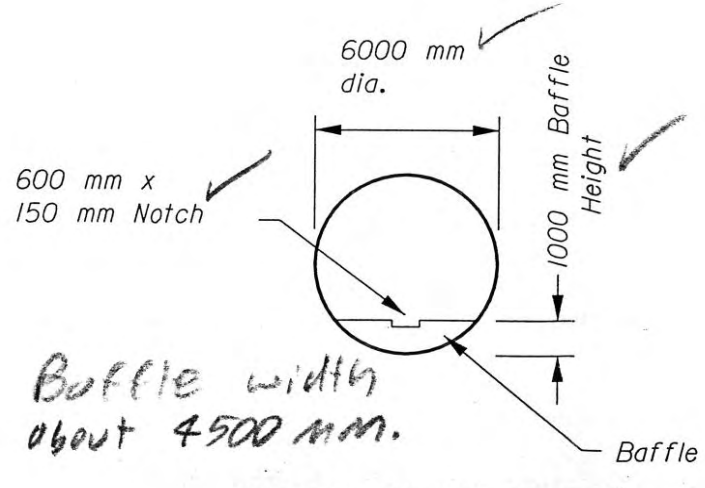

Baffle width about 4500 mm.

BAFFLED CULVERT DETAILS

GENERAL NOTES:

1. Conserve native streambed material encountered in the excavation for use as conserved streambed material.

2. Place conserved streambed material in the culvert to match the existing streambed gradient and elevation. If sufficient streambed material is not available, use material with a coarse gradation (gravels, cobbles) comparable to the natural stream.

PROPOSED CULVERT INSTALLATION
WINCHESTER CREEK - STATION 30+540
6000 mm x 22.5 m CULVERT

Date:
By:
Designed:
Checked:

C:\CADD\DGN\WAFHI158\158I\ph8FINAL.dgn 13:34

XY =