ALTERNATE 4

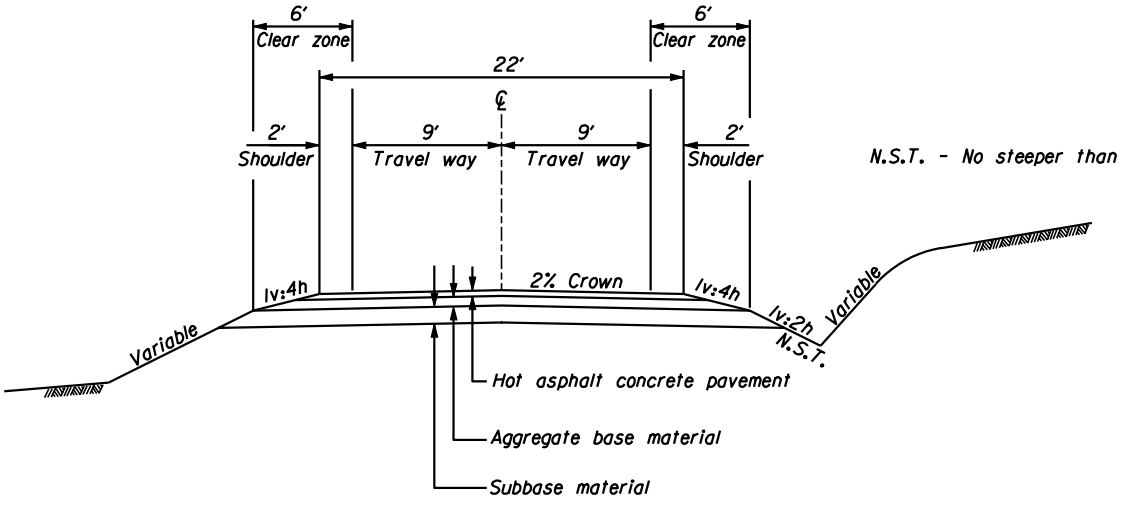

- FOLLOW EXISTING ALIGNMENT - MINOR ALIGNMENT AND GRADE IMPROVEMENTS- SIGNING FOR TIGHT CURVES.
- PERPENDICULAR PARKING AND TURN-OUTS ALONG ROAD AT SPECIFIED LOCATIONS.
- LOW IMPACT MEANDER.

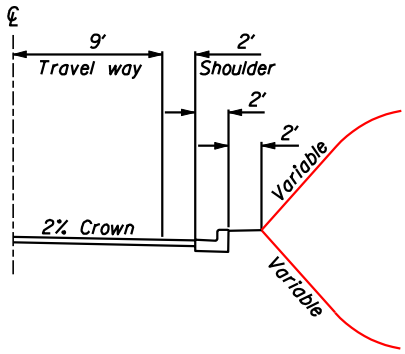

CURB SECTION

Middle Fork Snoqualmie River Road
Washington PFH 29-1(1)

TYPICAL SECTION

MP 1.32 to 12.1

Alternate 4