STATE	PROJECT	SHEET NUMBER

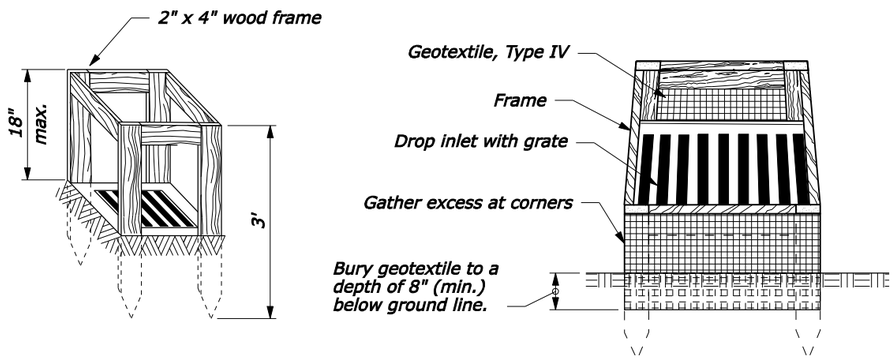

SILT FENCE DROP INLET PROTECTION (TYPE A)

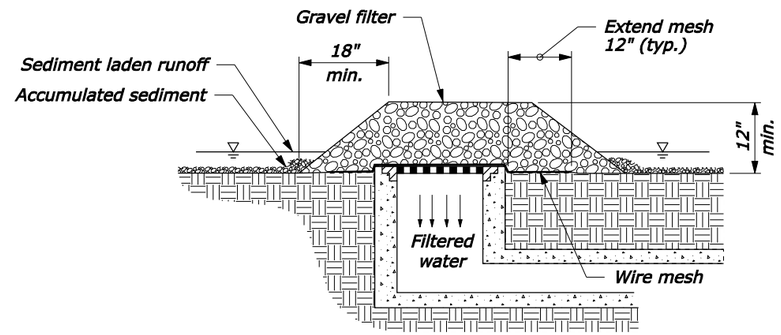

GRAVEL AND WIRE MESH DROP INLET PROTECTION (TYPE B)

NOTE:

1. For gravel filters use 2" - 3" diameter coarse aggregate.
2. Use wire mesh with ½" x ½" openings.
3. Use Type A inlet protection in sump locations only.
4. Use Type B inlet protection only in sump locations where heavy concentrated flows are not expected. Do not use where ponding around the structure might cause inconvenience or damage.

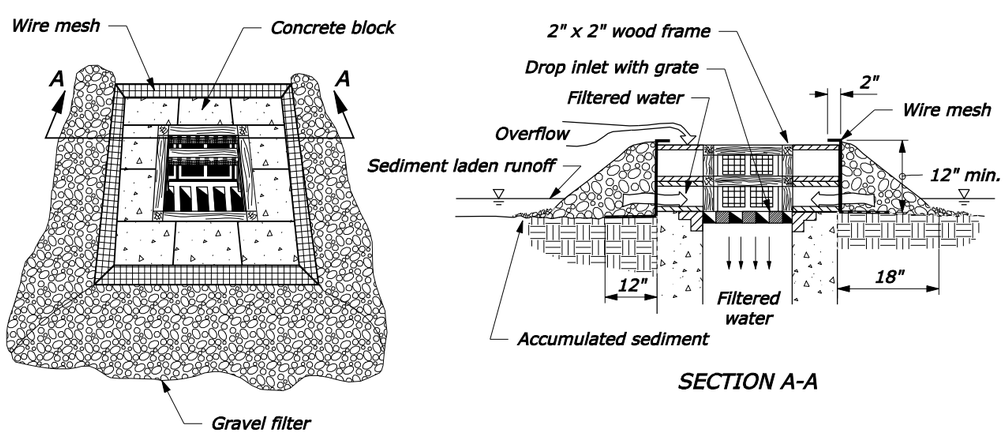

SECTION A-A

BLOCK AND GRAVEL DROP INLET PROTECTION (TYPE C)

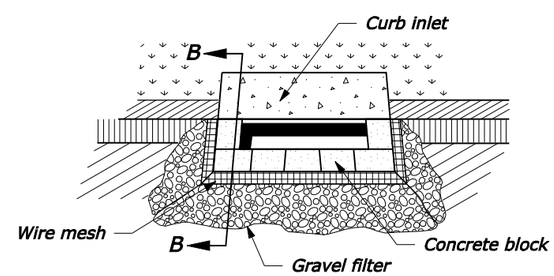

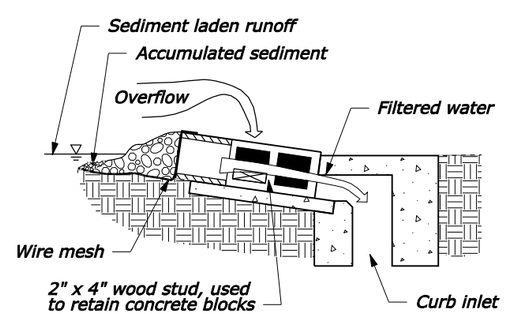

SECTION B-B

CURB INLET PROTECTION, BLOCK AND GRAVEL (TYPE D)

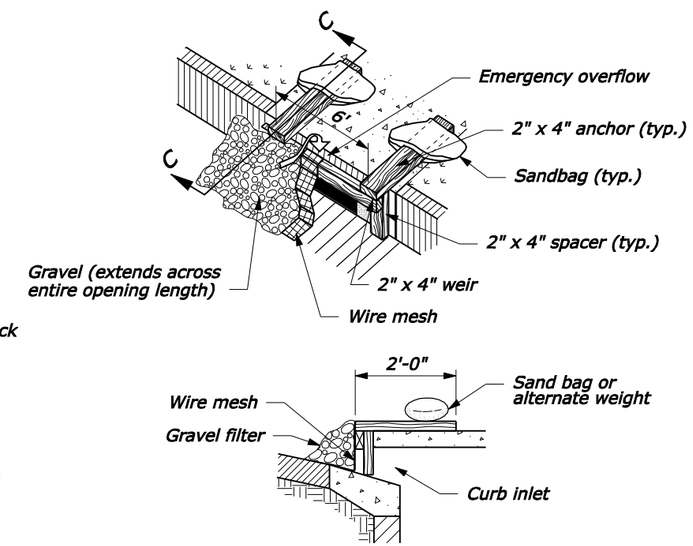

SECTION C-C

CURB INLET PROTECTION, WOODEN WEIR (TYPE E)

NO SCALE

U.S. DEPARTMENT OF TRANSPORTATION
FEDERAL HIGHWAY ADMINISTRATION
FEDERAL LANDS HIGHWAY

U.S. CUSTOMARY STANDARD

TEMPORARY INLET PROTECTION

STANDARD APPROVED FOR USE 6/2005

REVISED:

STANDARD 157-2

06-Oct-2005 08:25 AM
F:\StanDraw\st15702.dgn [US Customary]